Ref. No. 3915
Nov., 2005

Integra SERVICE MANUAL

AV RECEIVER
MODEL DTR-6.6

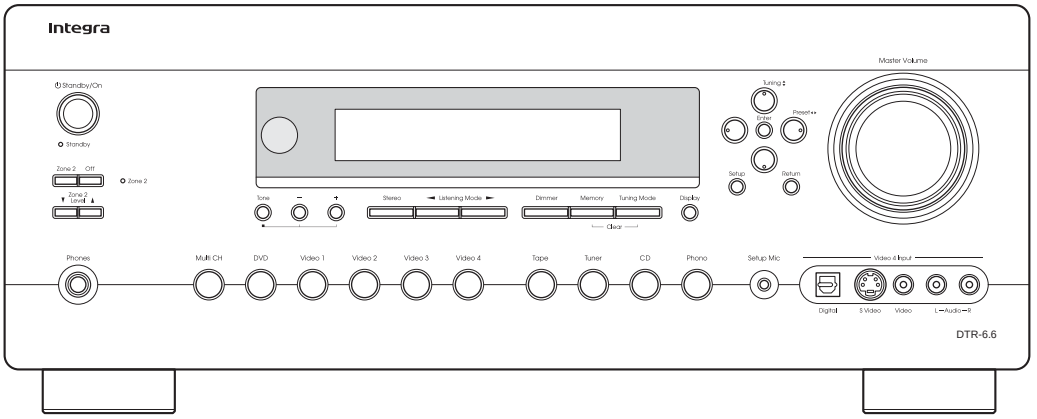

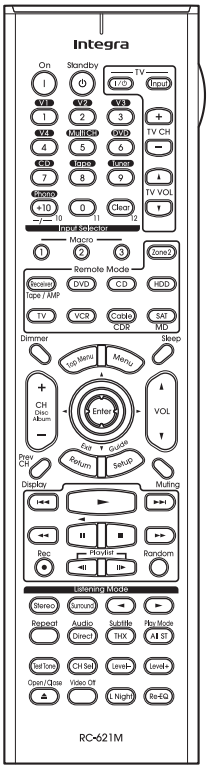

RC-621M

Black model

BMDD	120V AC, 60Hz
BMPA	230V~240V AC, 50Hz

SAFETY-RELATED COMPONENT WARNING!!

THE MARK ⚠ FOUND ON SOME COMPONENT PARTS INDICATES THE CRITICAL FOR RISK OF FIRE AND ELECTRIC SHOCK.
WHEN REPLACING, BE SURE TO USE PARTS OF IDENTICAL DESIGNATION.
MAKE LEAKAGE-CURRENT OR RESISTANCE MEASUREMENTS TO DETERMINE THAT EXPOSED PARTS ARE ACCEPTABLY INSULATED FROM THE SUPPLY CIRCUIT BEFORE RETURNING THE APPLIANCE TO THE CUSTOMER.

SPECIFICATIONS

Amplifier Section

Power Output	
2 channels driven:	**100 W + 100 W (8Ω , 20 Hz~20 kHz, FTC)**
	130 W + 130 W (6Ω , 1 kHz, DIN)
	160 W + 160 W (6Ω , 1 kHz, JEITA)
Dynamic Power	230 W + 230 W (3Ω , Front)
	170 W + 170 W (4Ω , Front)
	115 W + 115 W (8Ω , Front)
THD (Total Harmonic Distortion)	0.08% (Power Rated)
Damping Factor	60 (Front, 1 kHz, 8Ω)
Input Sensitivity and Impedance	200 mV/ 47 kΩ (LINE)
	2.5 mV/47 kΩ (PHONO MM)
Output Level and Impedance	200 mV/ 470Ω (REC OUT)
Phono Overload	70 mV (MM 1 kHz, 0.5%)
Frequency Response	5 Hz~100 kHz/ +1 dB-3 dB (LINE)
Tone Control	±10 dB, 50 Hz (BASS)
	±10 dB, 20 kHz (TREBLE)
Signal to Noise Ratio	106 dB (LINE, IHF-A)
	80 dB (PHONO, IHF-A)
Speaker Impedance	4Ω~ or 6Ω~

Video Section

Input Sensitivity/Output Level and Impedance	1 Vp-p /75Ω (Component and S-Video Y)
	0.7 Vp-p /75Ω (Component Pb/Cb,Pr/Cr)
	0.28 Vp-p /75Ω (S-Video C)
	1 Vp-p /75Ω (Composite)
Component Video Frequency Response	5 Hz ~ 100 MHz

Tuner Section

FM

Tuning Frequency Range	North American: 87.5 MHz~107.9 MHz
	Australian: 87.5 MHz~ 108.0 MHz
Usable Sensitivity	Stereo: 22.2 dBf (75Ω IHF)
	Mono: 15.2 dBf (75Ω IHF)
Signal to Noise Ratio	Stereo: 67 dB (IHF-A)
	Mono: 73 dB (IHF-A)
THD	Stereo: 0.5% (1 kHz)
	Mono:0.3% (1 kHz)
Frequency Response	30 Hz~15 kHz / ±1 dB
Stereo Separation	40 dB (1 kHz)

AM

Tuning Frequency Range	North American: 530 kHz~1710 kHz
	Australian: 522/530 kHz~1611/1710 kHz
Usable Sensitivity	300 µV/m
Signal to Noise Ratio	40 dB
THD	0.70%

General

Power Supply	North American: AC 120 V, 60 Hz
	Australian: AC 230-240 V, 50 Hz
Power Consumption	North American: 7.5 A
	Australian: 680 W
Standby Power Consumption	North American: 0.1 W
	Australian: 0.5 W
Dimensions (W × H × D)	435 × 173.5 × 428.5 mm
	17-1/8" × 6-13/16" × 16-7/8"
Weight	North American: 13.1 kg
	28.9 lbs.
	Australian: 13.3 kg
	29.3 lbs.

Video Inputs

Component	IN1, IN2, IN3
S-Video	DVD, VIDEO1, VIDEO2, VIDEO3, VIDEO4
Composite	DVD, VIDEO1, VIDEO2, VIDEO3, VIDEO4

Video Outputs

Component	OUT
S-Video	MONITOR OUT, VIDEO1, VIDEO2
Composite	MONITOR OUT, VIDEO1, VIDEO2

Audio Inputs

Digital Inputs	Optical: 5 (1 on Front Panel)
	Coaxial: 2
Analog Inputs	DVD (MULTICHANNEL), VIDEO1, VIDEO2, VIDEO3, VIDEO4, TAPE, CD, PHONO
Multichannel Input	7.1 ch (DVD)

Audio Outputs

Digital Output	Optical: 1
Analog Outputs	TAPE, VIDEO1, VIDEO2, ZONE2 L/R/SUBWOOFER
Multichannel Pre Outputs	7.1 ch
Speaker Outputs	L, R, C, SL, SR, SBL, SBR ZONE2 (L, R)
Phones	1
RS232	1
IR Input/Output	2/1
12 V Trigger Out	A, B, C

Specifications and features are subject to change without notice.

SERVICE PROCEDURES

1. Replacing the fuses

This symbol located near the fuses indicates that the fuse used is fast operating type. For continued protection against fire hazard, replace with same type fuse. For fuse rating refer to the marking adjacent to the symbol.

Ce symbole indique que le fusible utlise est a rapide. Pour une protection permanente, n'untiliser que fusibles de meme type. Ce darnier est la qu le present symbol est appse.

CIRCUIT NO.	PART NO.	DESCRIPTION
F6901,F6902	252301GR	12A-TUL-250V,Fuse
F901	252079GR	6.3A-SE-EAK,Fuse <A>
	252330GR	10A-UL/T-233,Fuse <D>
F903	252075GR	2.5A-SE-EAK,Fuse <A>
	252326GR	5A-UL/T-233,Fuse <D>
F931,F932	252073GR	1.6A-SE-EAK,Fuse
F951,F952	252079GR	6.3A-SE-EAK,Fuse

Note: <D>:120V model only
<A>: Australian model only

2. To initialize the unit

This device employs a microprocessor to perform various functions and operations. If interference generated by an external power supply, radio wave, or other electrical source results in accident which causes the specified operations and functions to operate abnormally.
To perform a result, please follow the procedure below.
1.Press and hold down the VIDEO-1 button, then press the STANDBY button.
2.After "Clear" is displayed, the preset memory and each mode stored in the memory, such as surround, are initialized and will return to the factory setting.

3. Safety-check out

(U.S.A. model only)
After correcting the original service problem, perform the following safety check before releasing the set to the customer.
Leakage Current Check
Measure leakage current to a known earth ground(water pipe, conduit, etc.) by connecting a leakage current tester between the earth ground and exposed metal parts of the appliance (input/output terminals, screwheads,metal overlays, etc.).

4. Changing the AM band step

With the exception of the worldwide models, a tuning step selector switch is not provided. When you change the band step, change the parts as shown below.

	To 10kHz	To 9kHz
R714	Open	10 k

EXPLODED VIEW

BLOCK DIAGRAM
AMPLIFIER SECTION

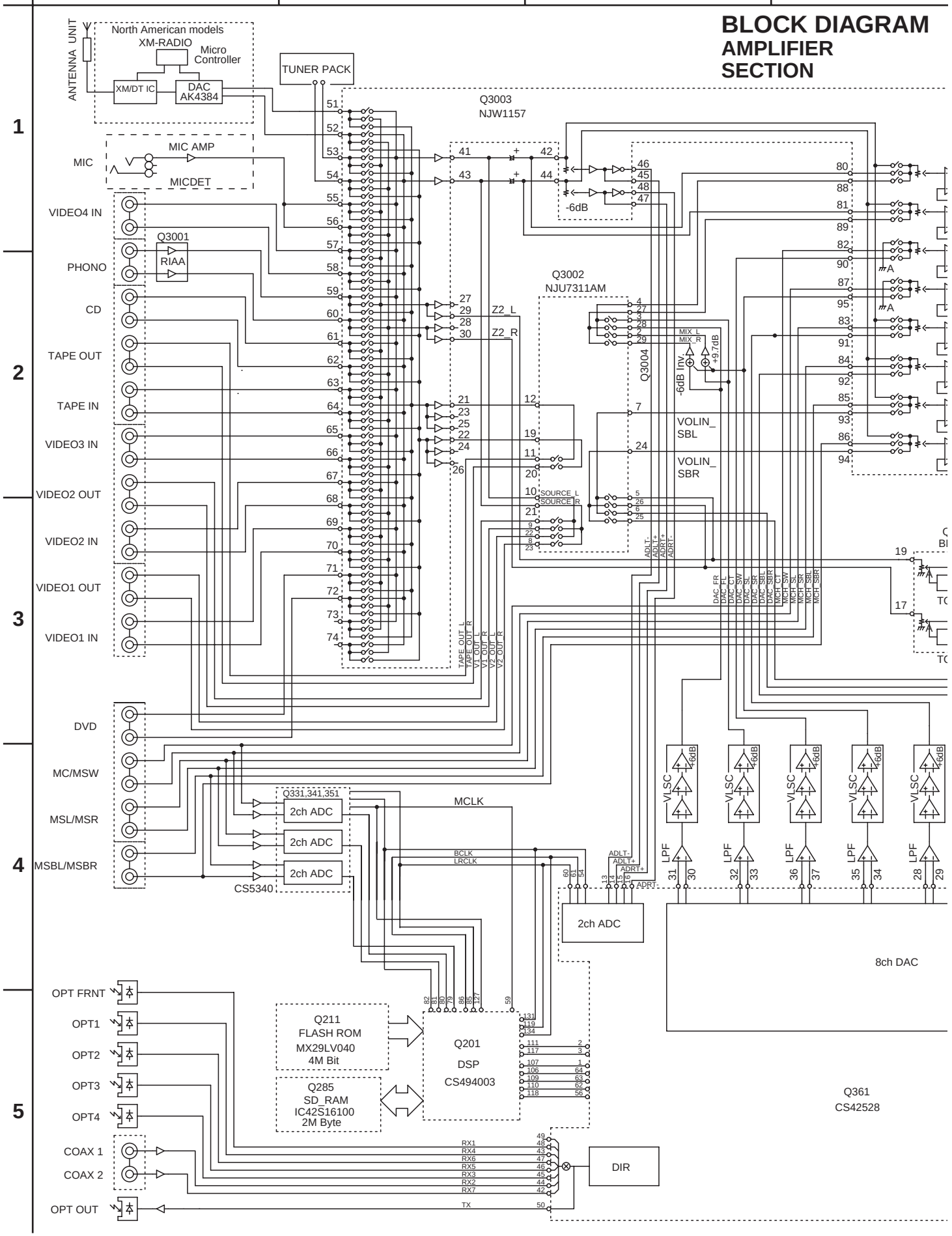

BLOCK DIAGRAM
AMPLIFIER SECTION

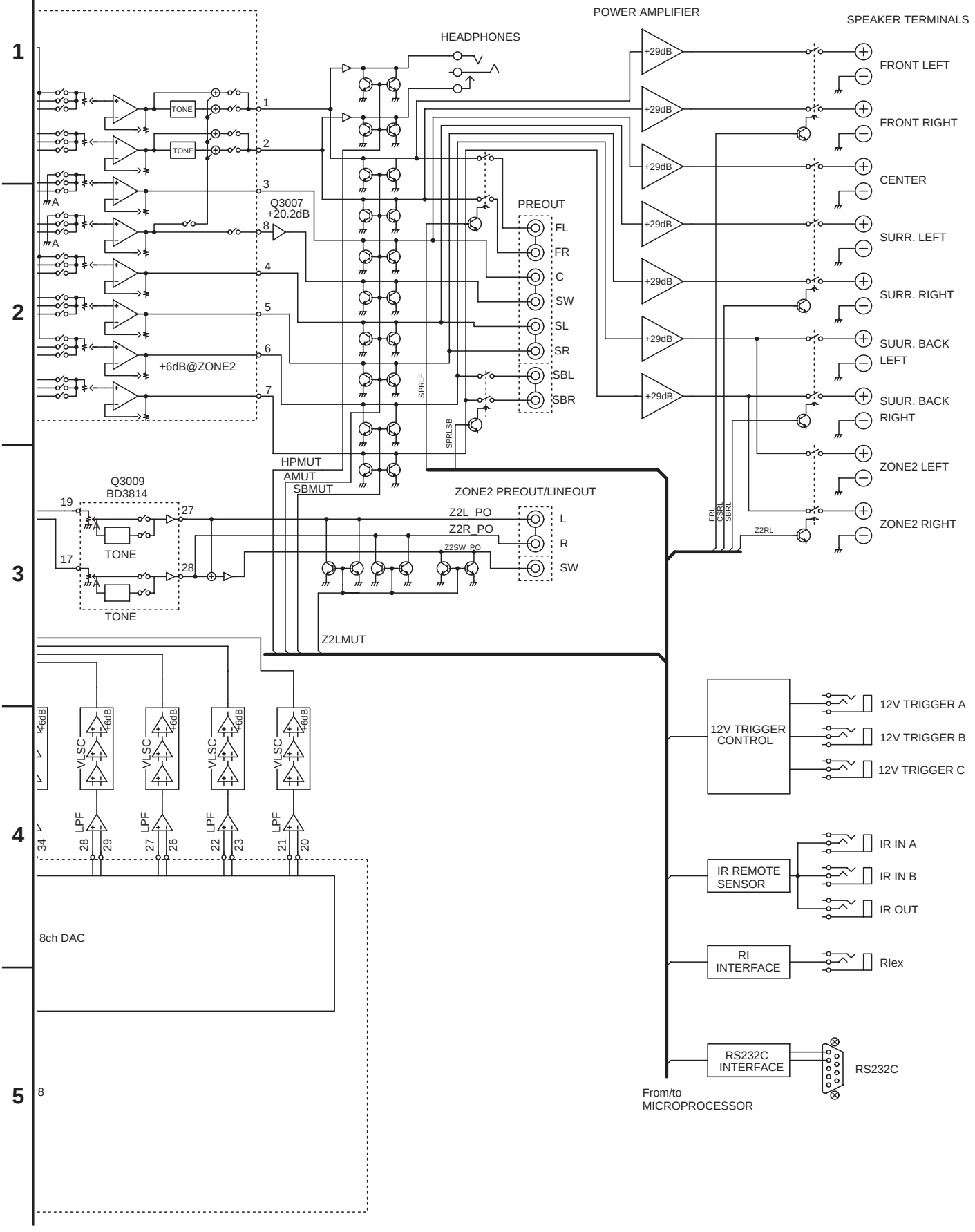

BLOCK DIAGRAM VIDEO SECTION

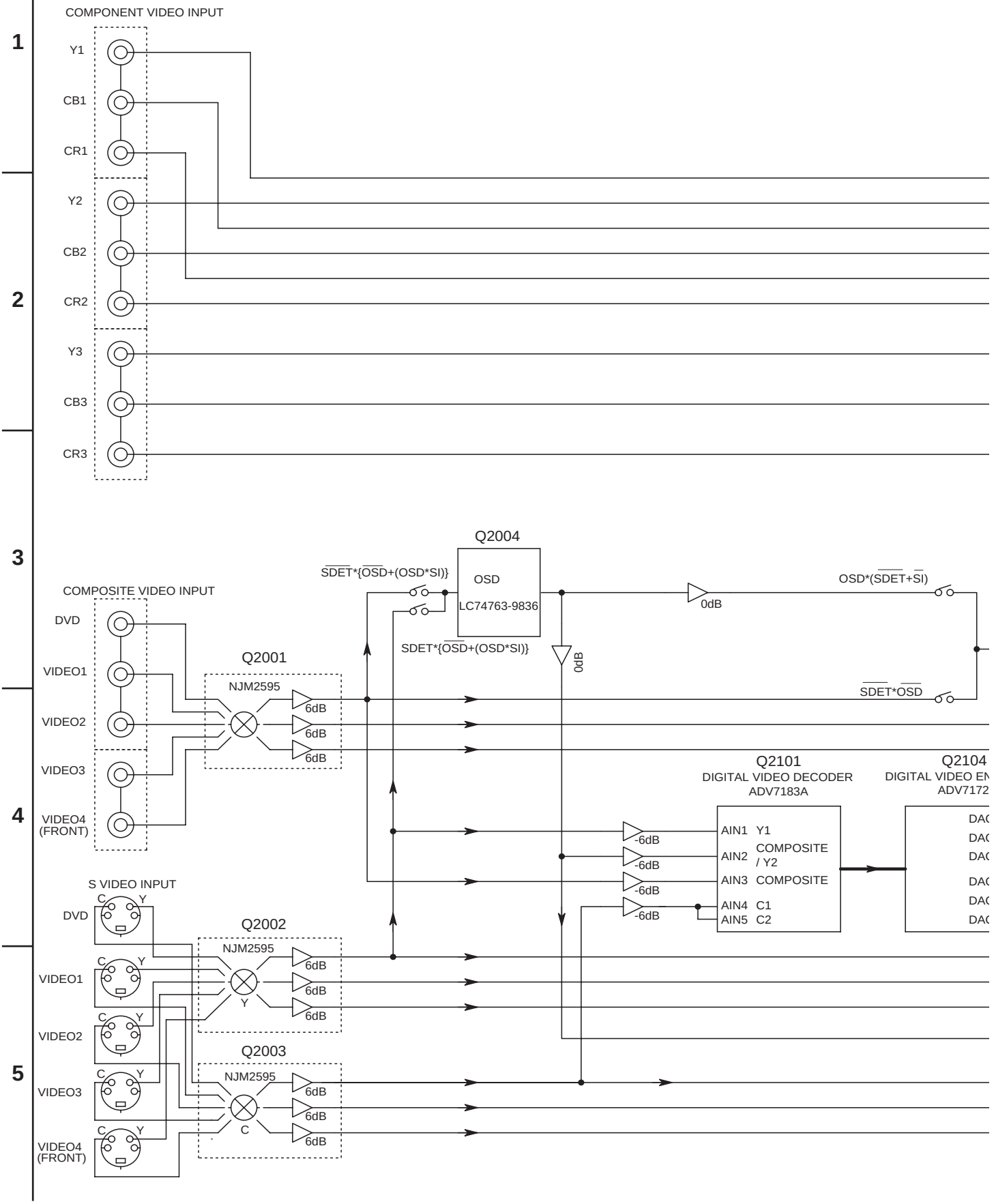

BLOCK DIAGRAM VIDEO SECTION

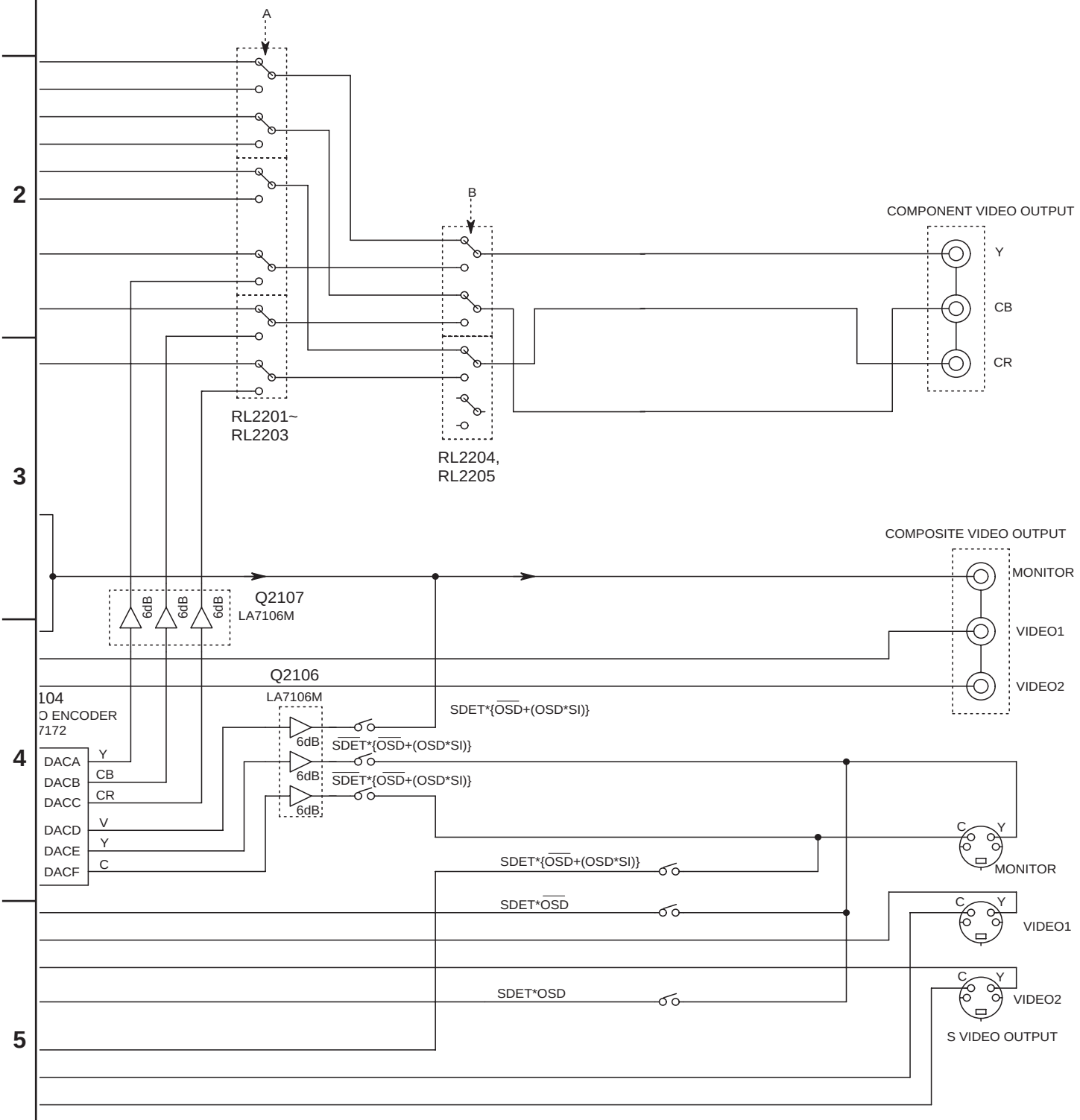

BLOCK DIAGRAM
AMPLIFIER SECTION

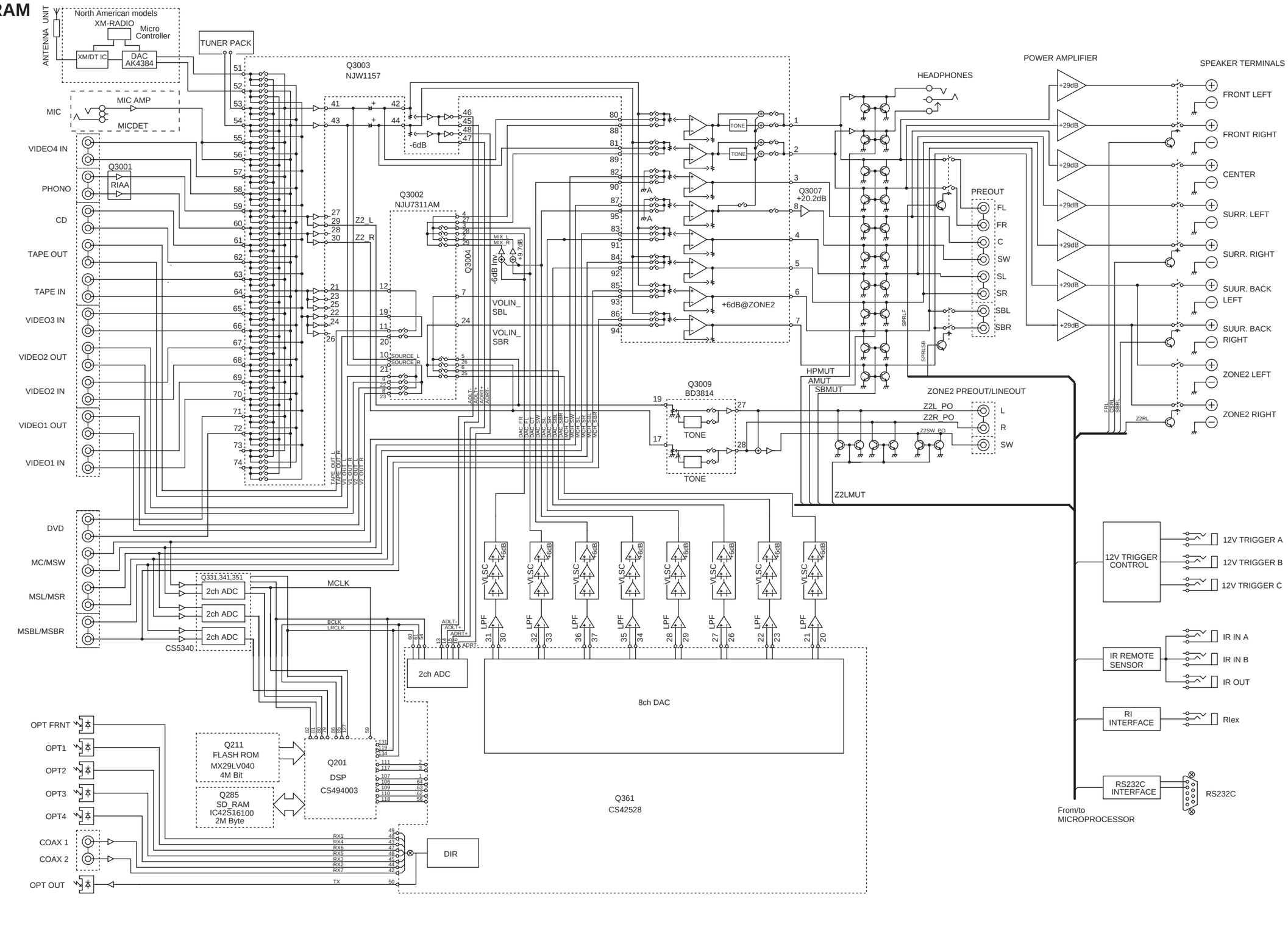

BLOCK DIAGRAM VIDEO SECTION

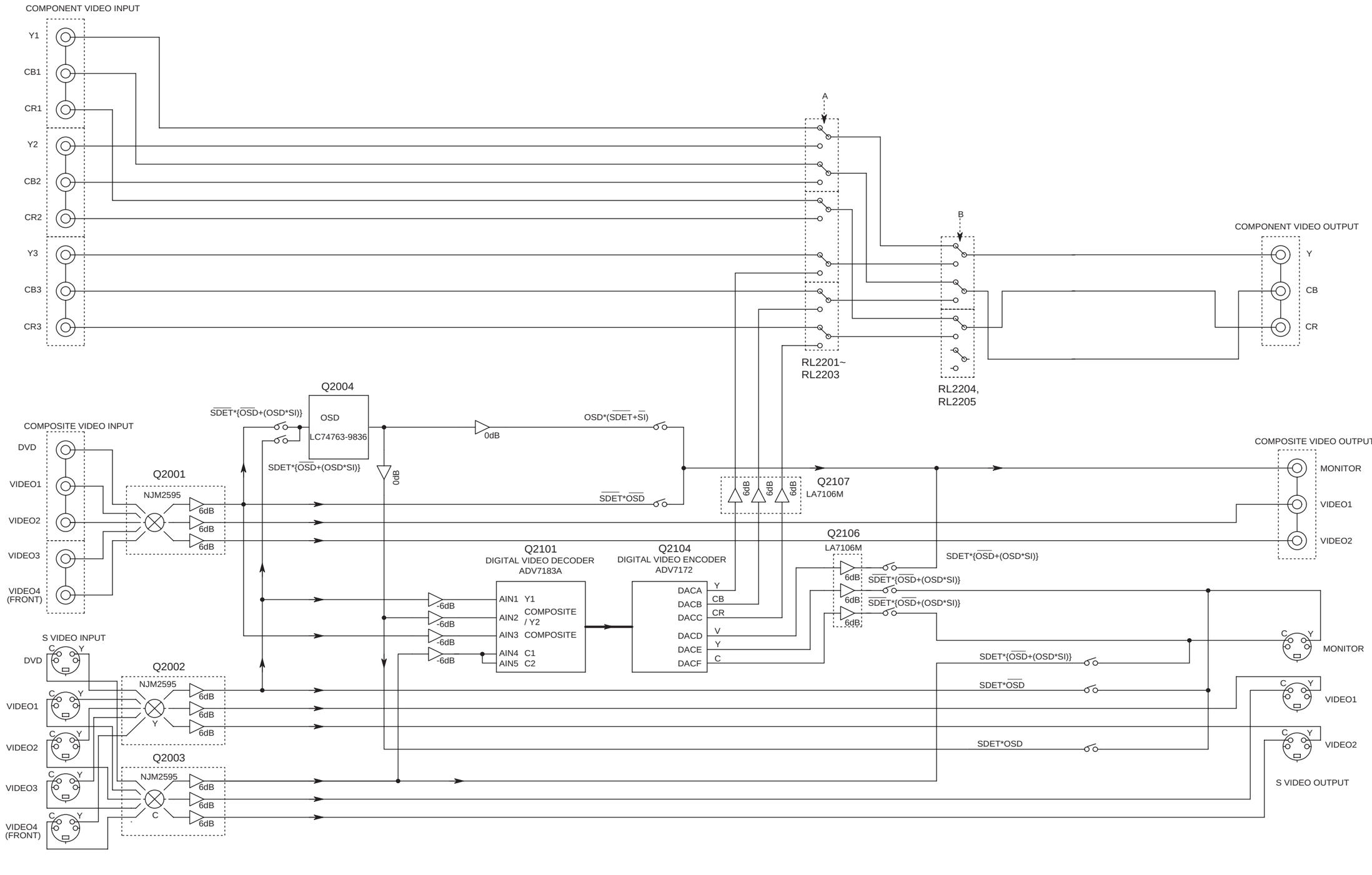

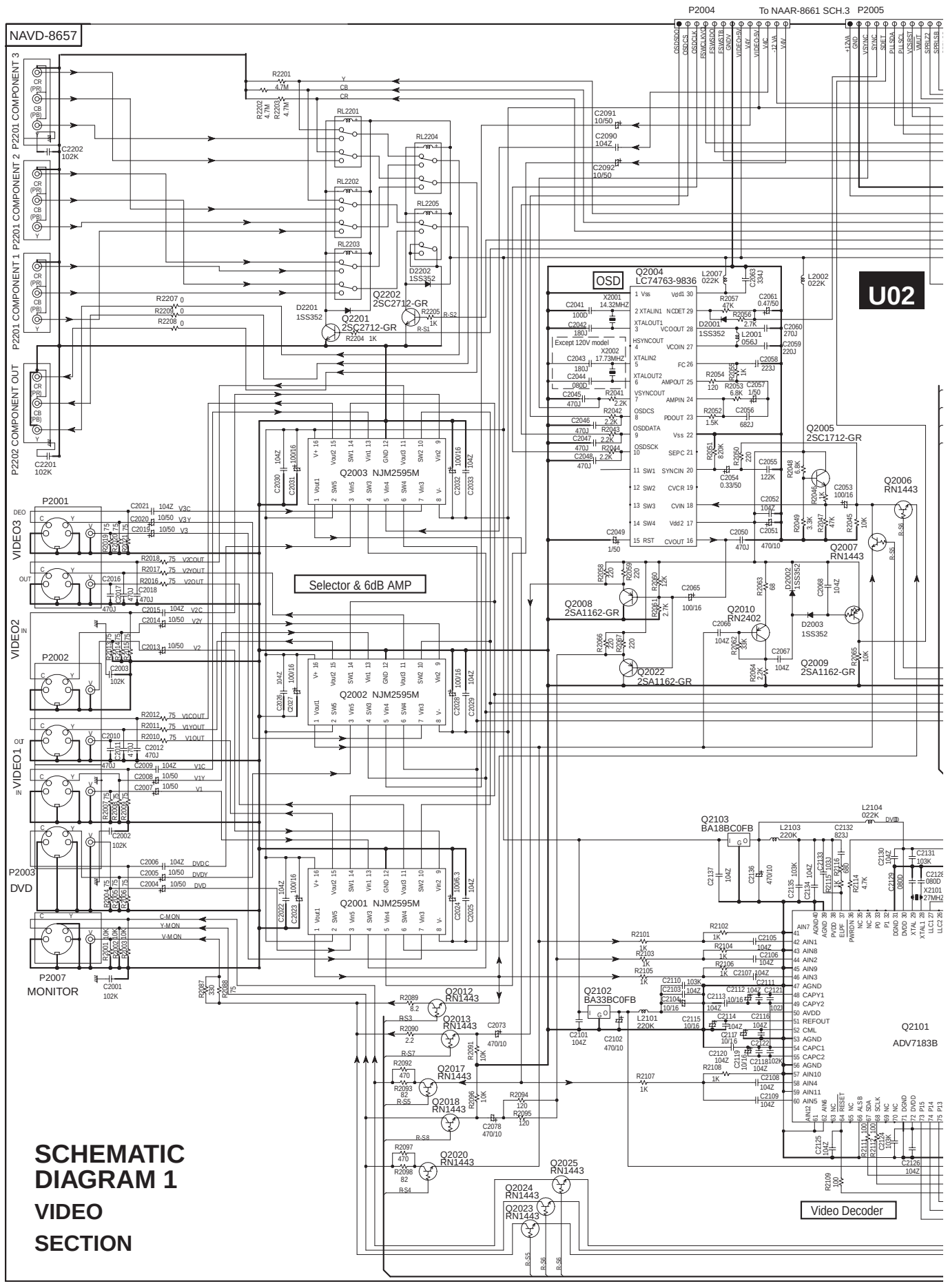
A
B
C
D
1
2
3
4
5
NAVD-8657
P2004
To NAAR-8661 SCH.3
P2005
U02
OSD
Q2004
LC74763-9836
Q2003 NJM2595M
Q2002 NJM2595M
Q2001 NJM2595M
Selector & 6dB AMP
Except 120V model
Q2101
ADV7183B
Video Decoder
SCHEMATIC DIAGRAM 1
VIDEO
SECTION

SCHEMATIC DIAGRAM 1

VIDEO SECTION

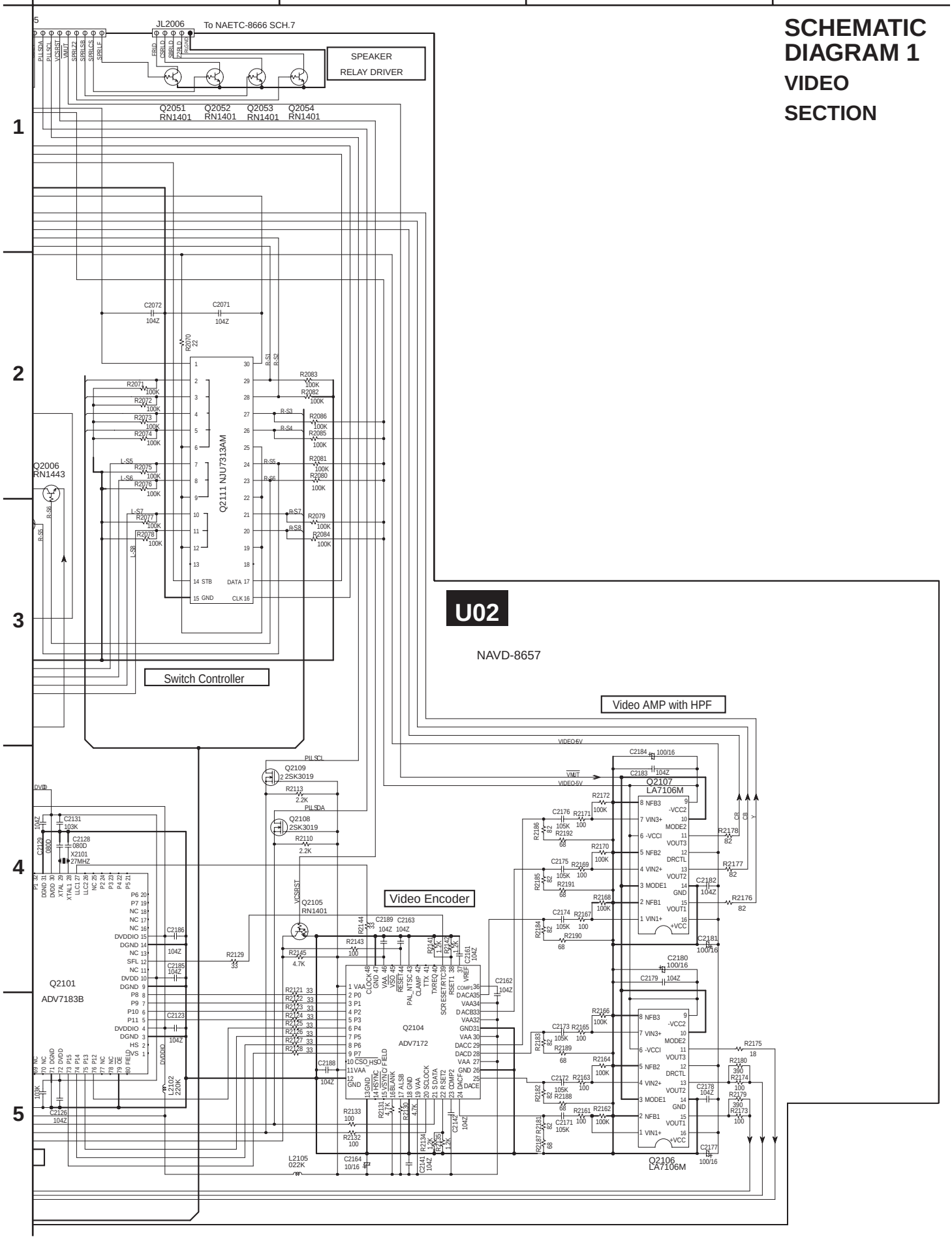

SCHEMATIC DIAGRAM 2 DSP SECTION

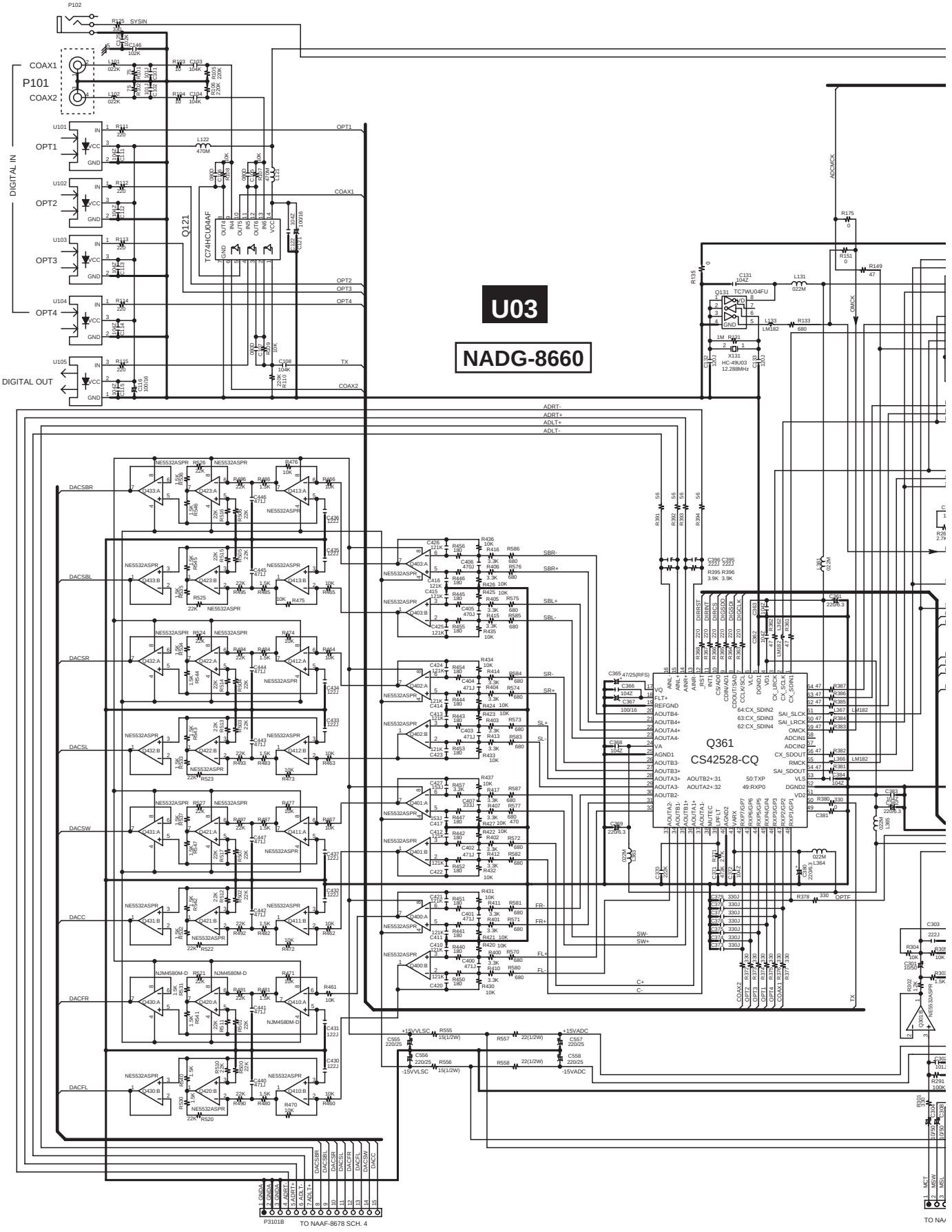

SCHEMATIC DIAGRAM 2 DSP SECTION

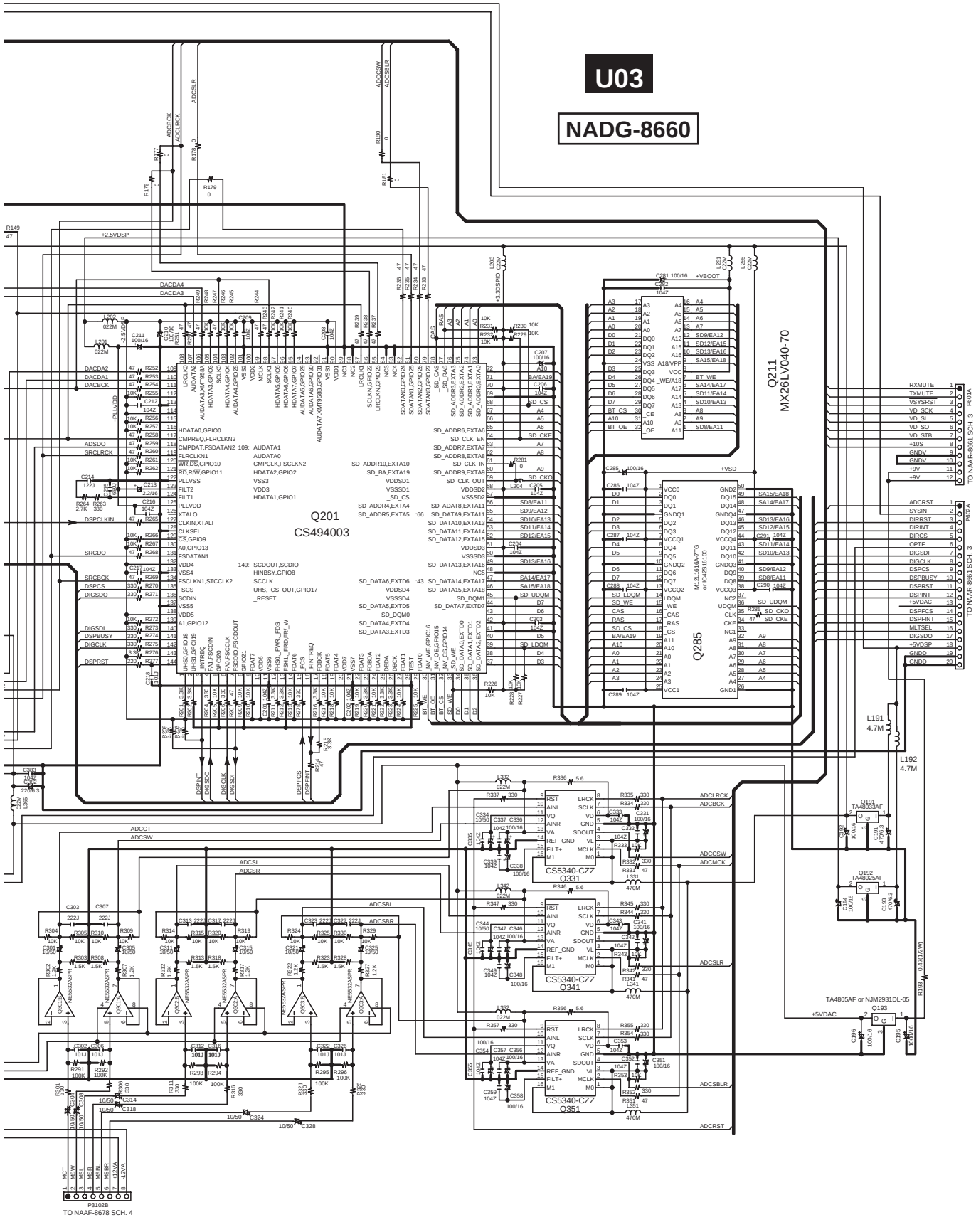

SCHEMATIC DIAGRAM 3
MICROPROCESSOR SECTION

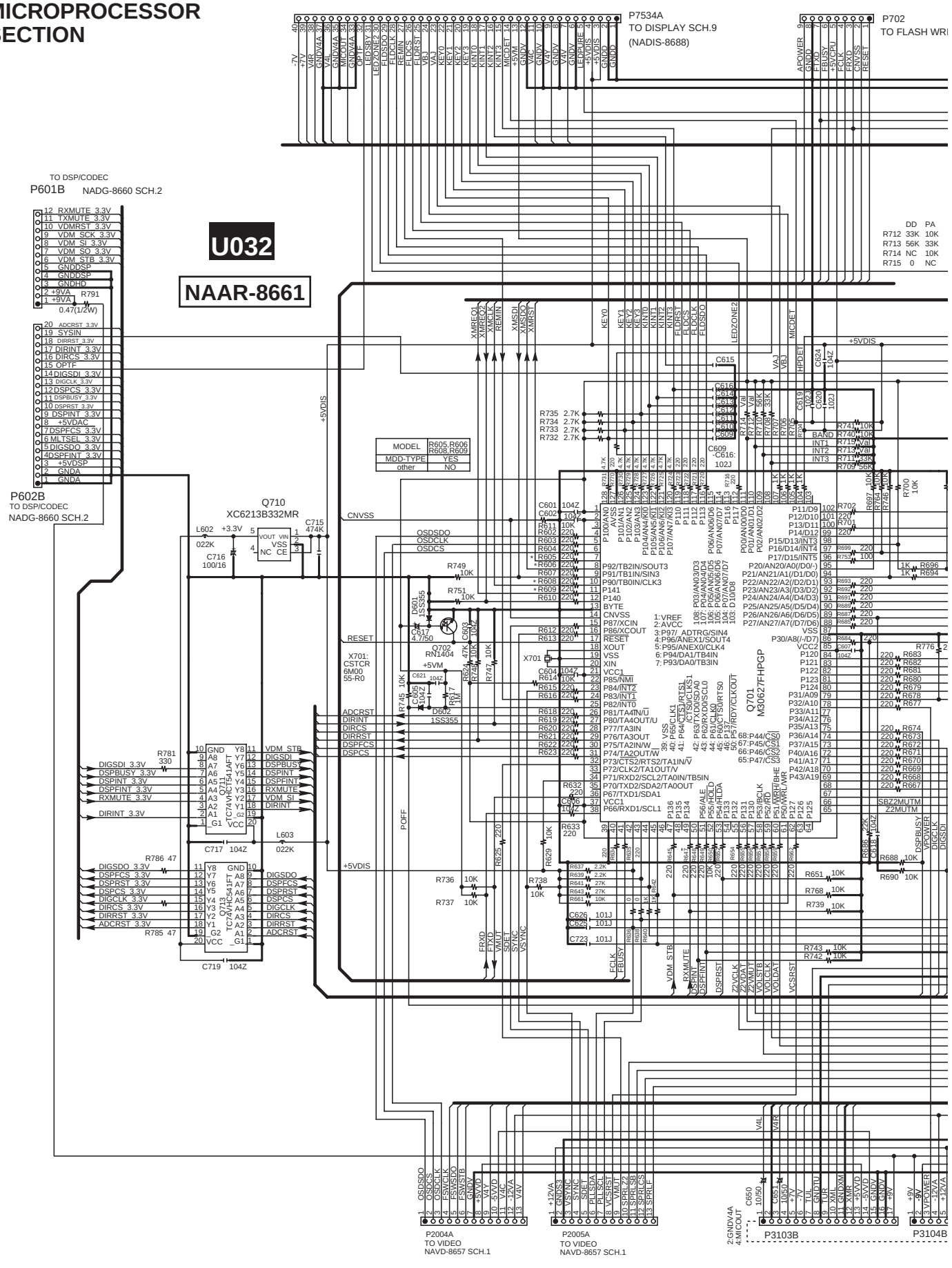

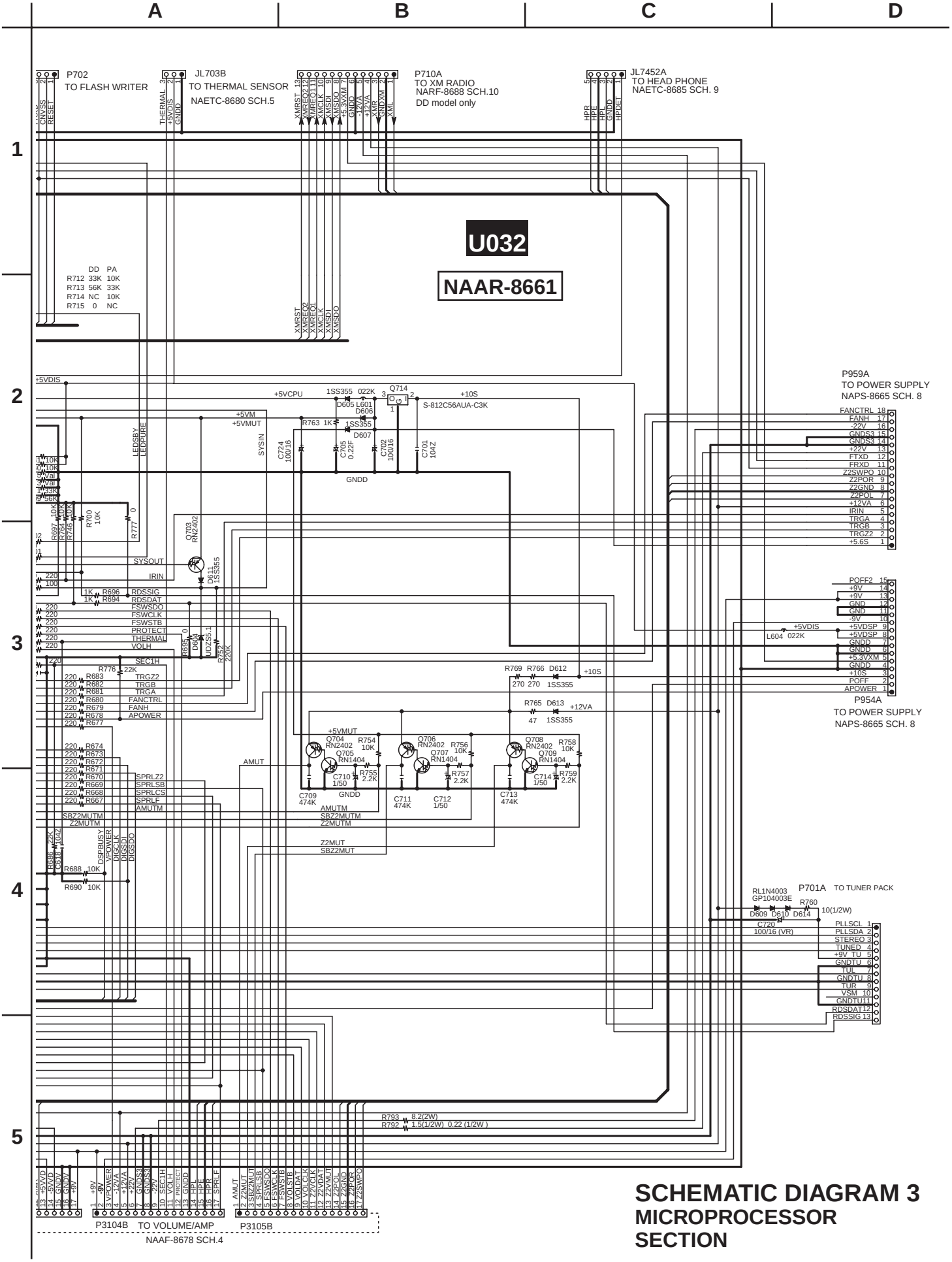
A
B
C
D
1
2
3
4
5
P702
TO FLASH WRITER
JL703B
TO THERMAL SENSOR
NAETC-8680 SCH.5
P710A
TO XM RADIO
NARF-8688 SCH.10
DD model only
JL7452A
TO HEAD PHONE
NAETC-8685 SCH. 9
U032
NAAR-8661
DD PA
R712 33K 10K
R713 56K 33K
R714 NC 10K
R715 0 NC
P959A
TO POWER SUPPLY
NAPS-8665 SCH. 8
P954A
TO POWER SUPPLY
NAPS-8665 SCH. 8
P701A TO TUNER PACK
P3104B TO VOLUME/AMP
NAAF-8678 SCH.4
P3105B
SCHEMATIC DIAGRAM 3
MICROPROCESSOR
SECTION

SCHEMATIC DIAGRAM 4 PREAMPLIFIER SECTION

U06

NAAF-8678(1/2)

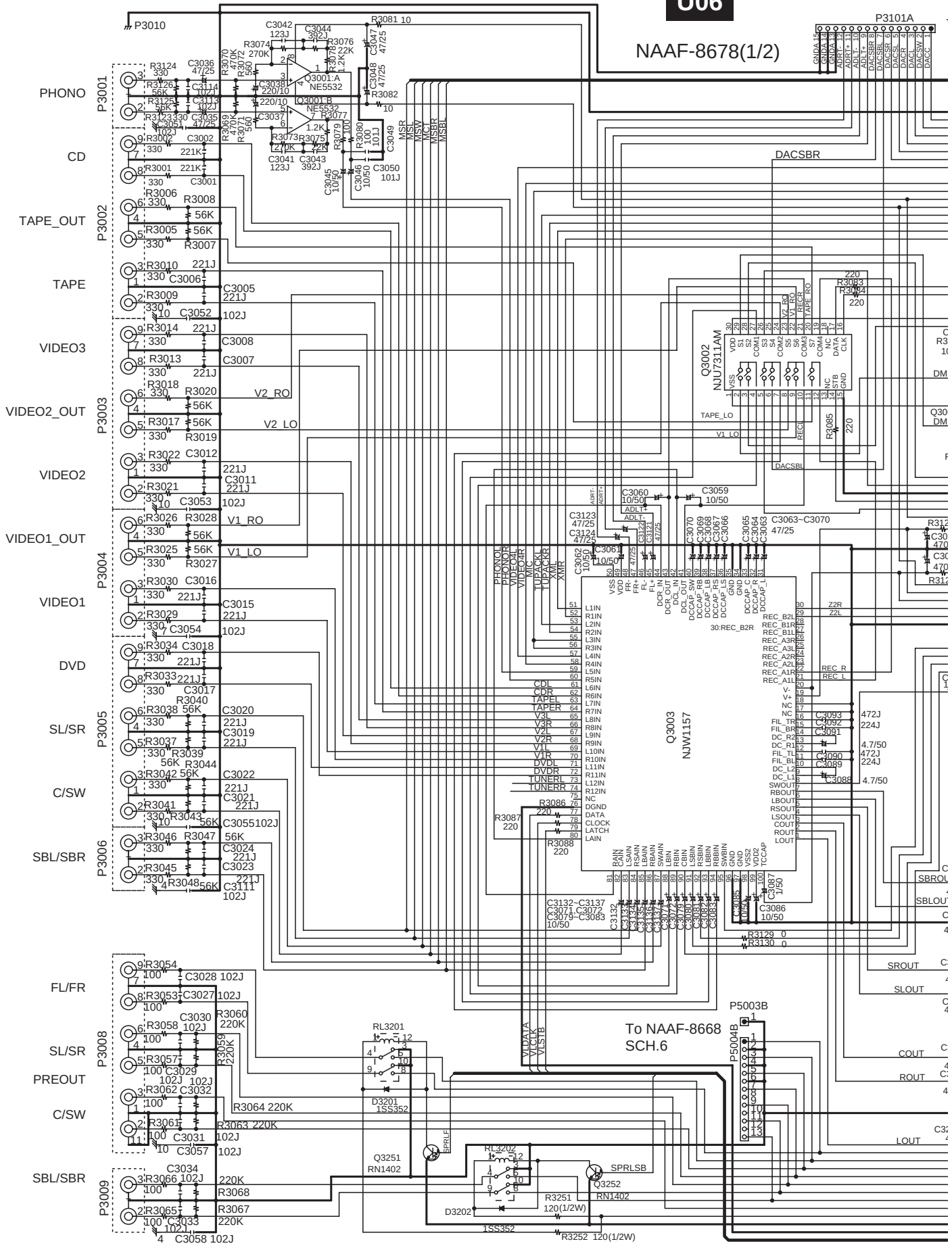

SCHEMATIC DIAGRAM 4 PREAMPLIFIER SECTION

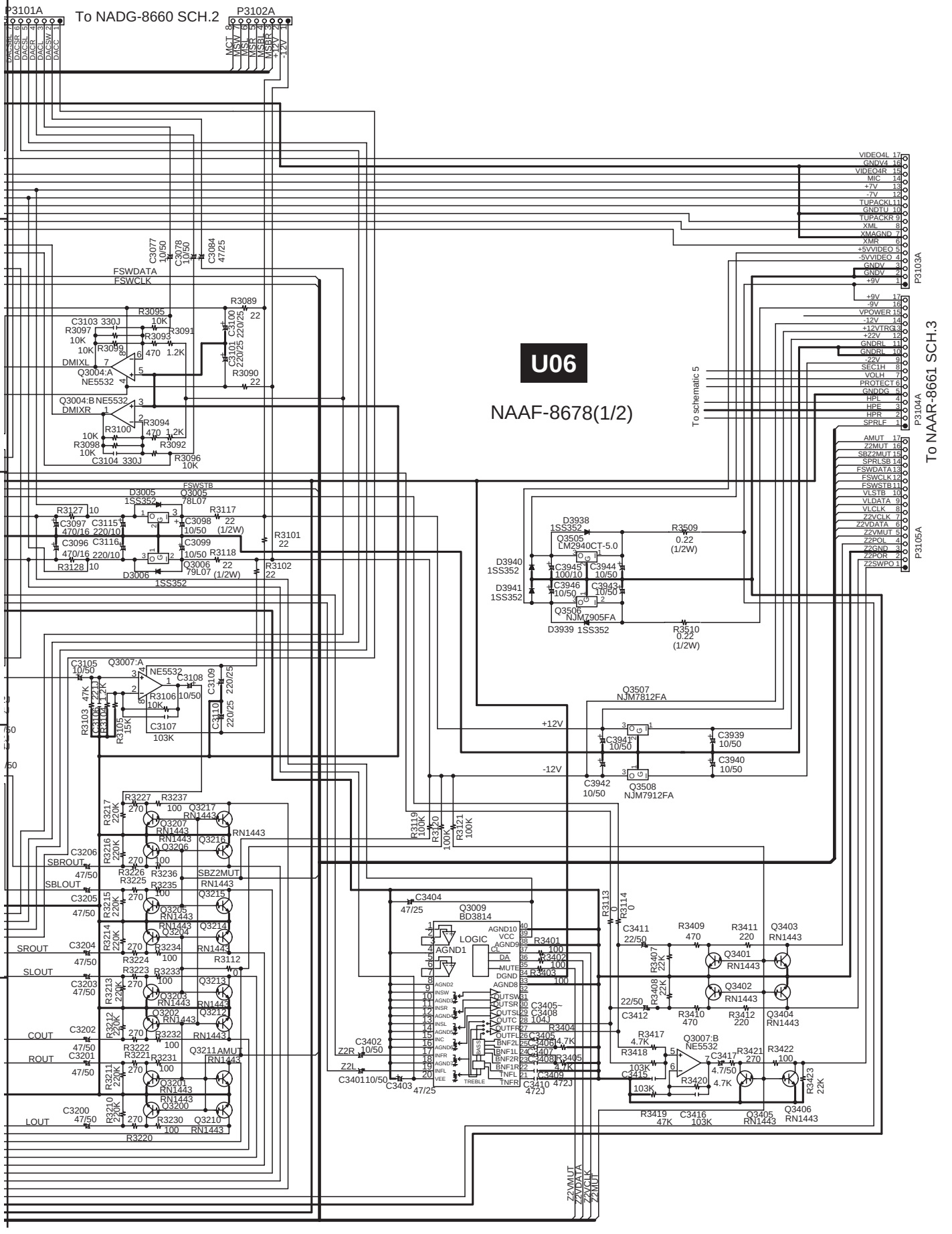

SCHEMATIC DIAGRAM 5
POWER AMPLIFIER SECTION

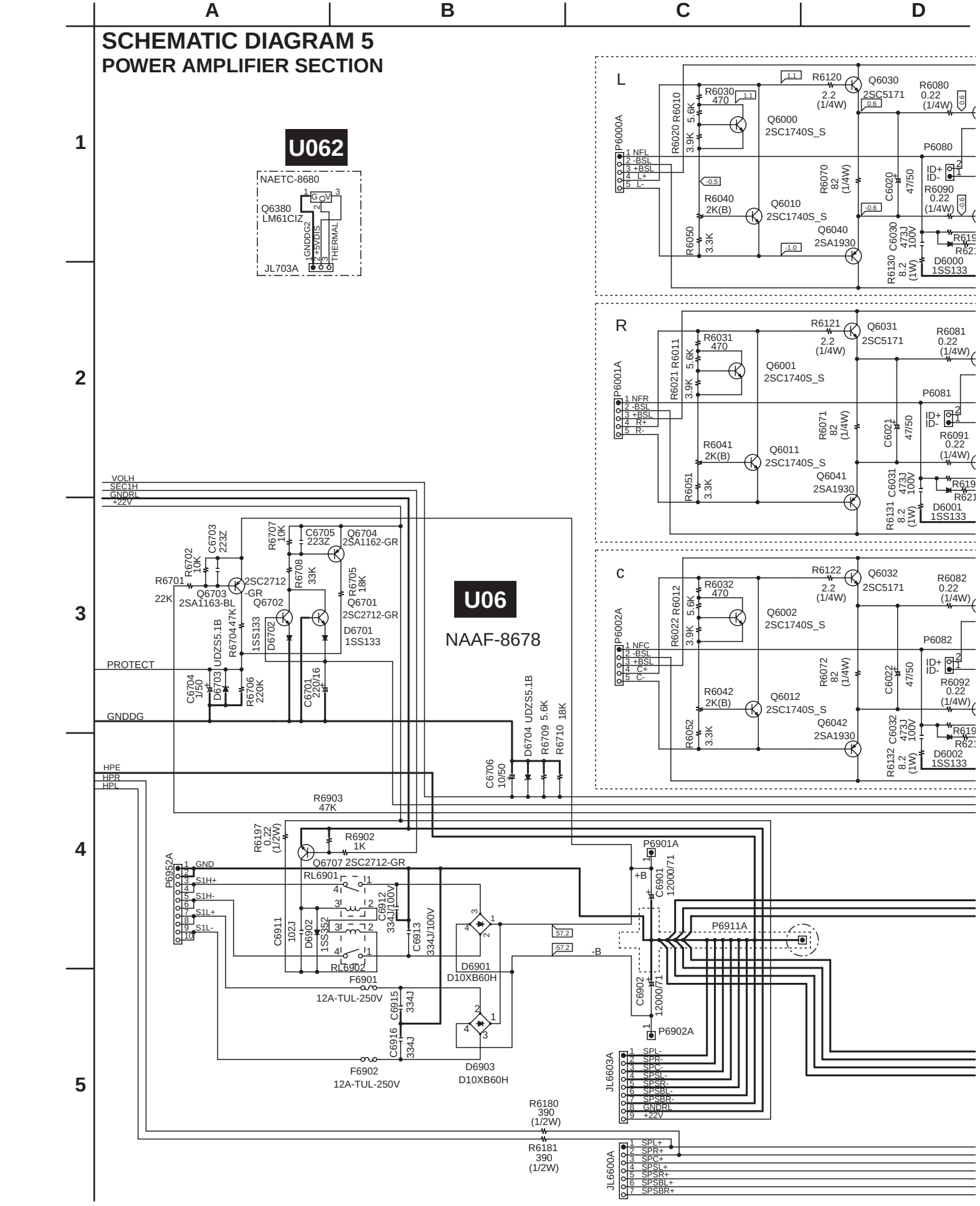

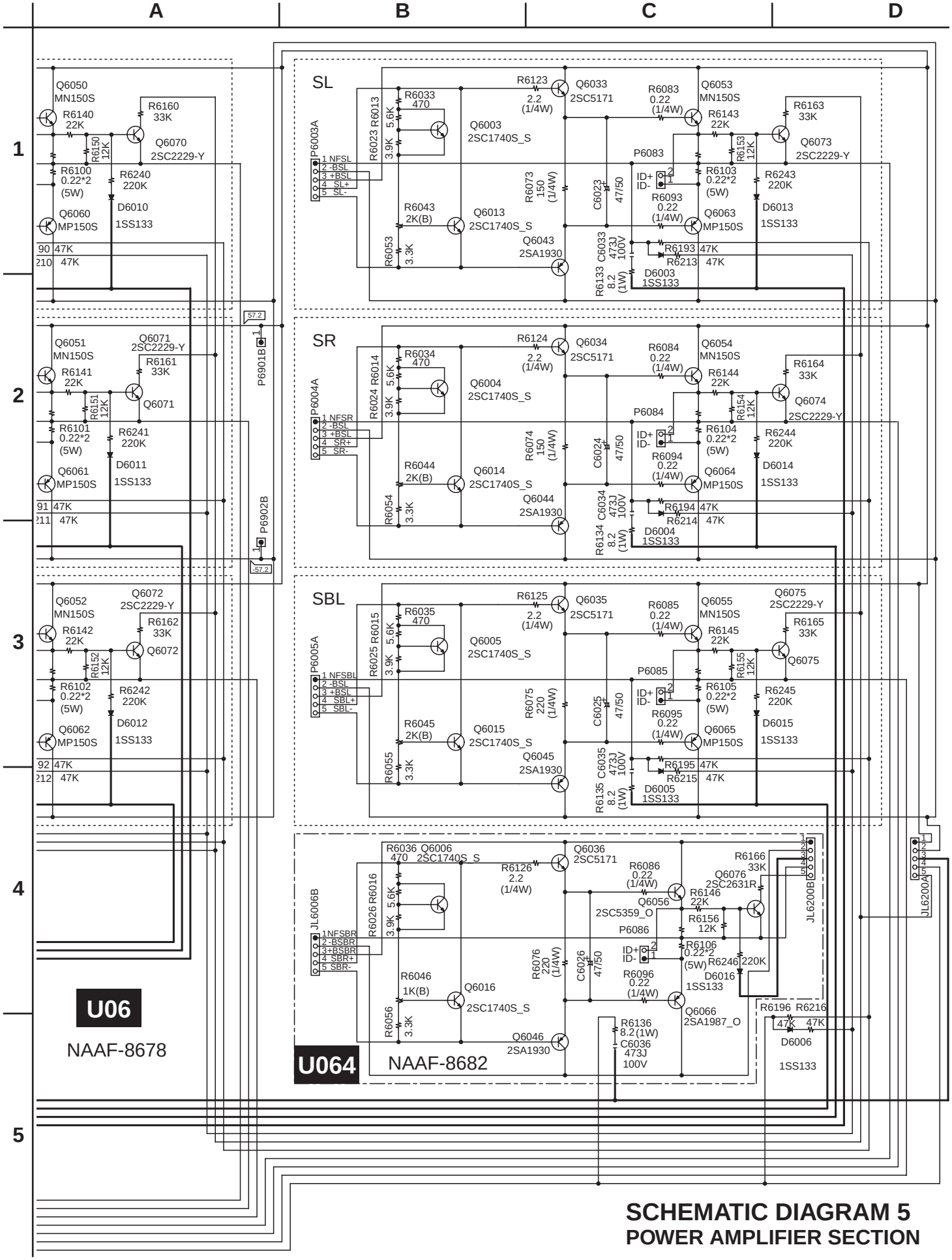

SCHEMATIC DIAGRAM 5
POWER AMPLIFIER SECTION

SCHEMATIC DIAGRAM 6
DRIVER SECTION

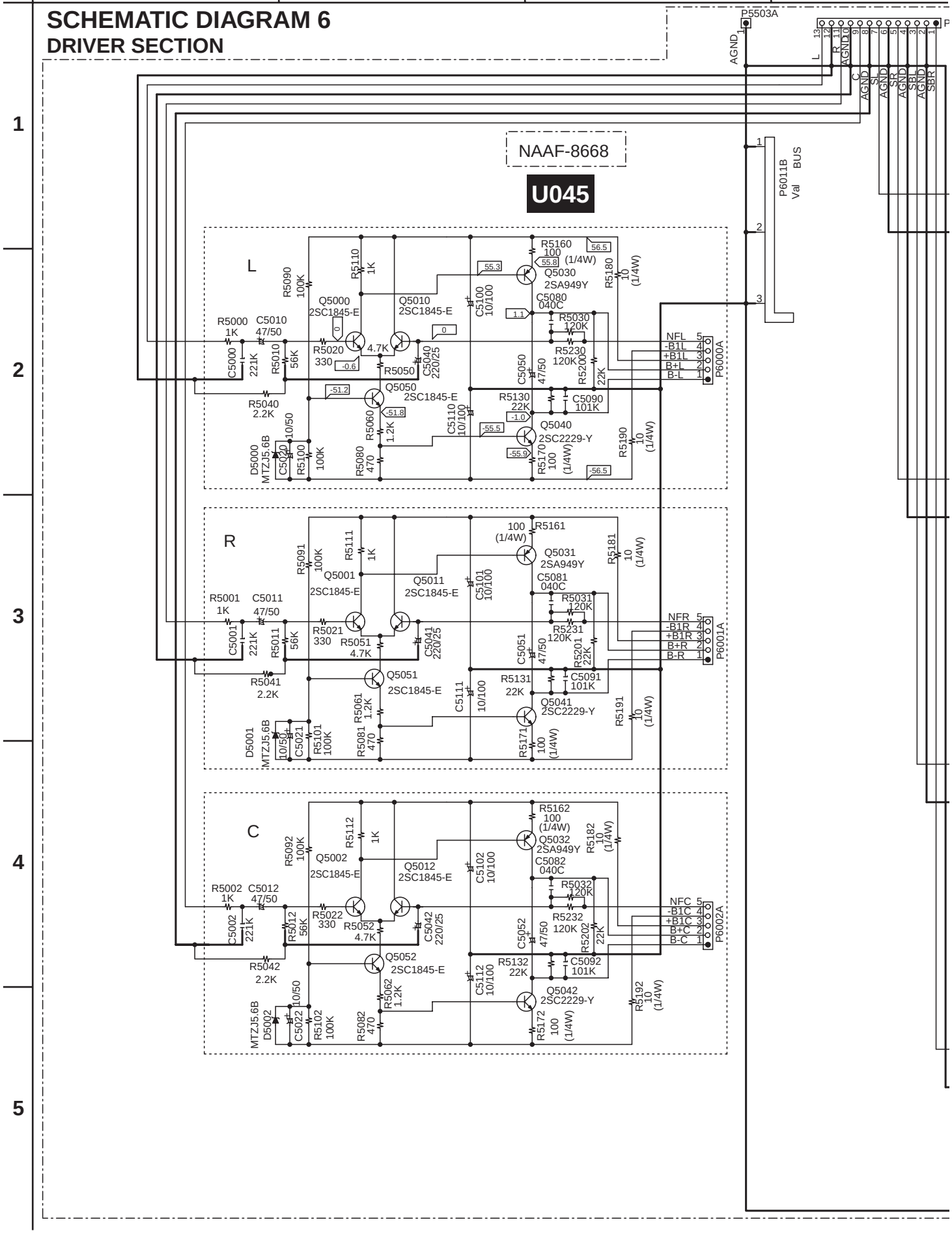

SCHEMATIC DIAGRAM 6
DRIVER SECTION

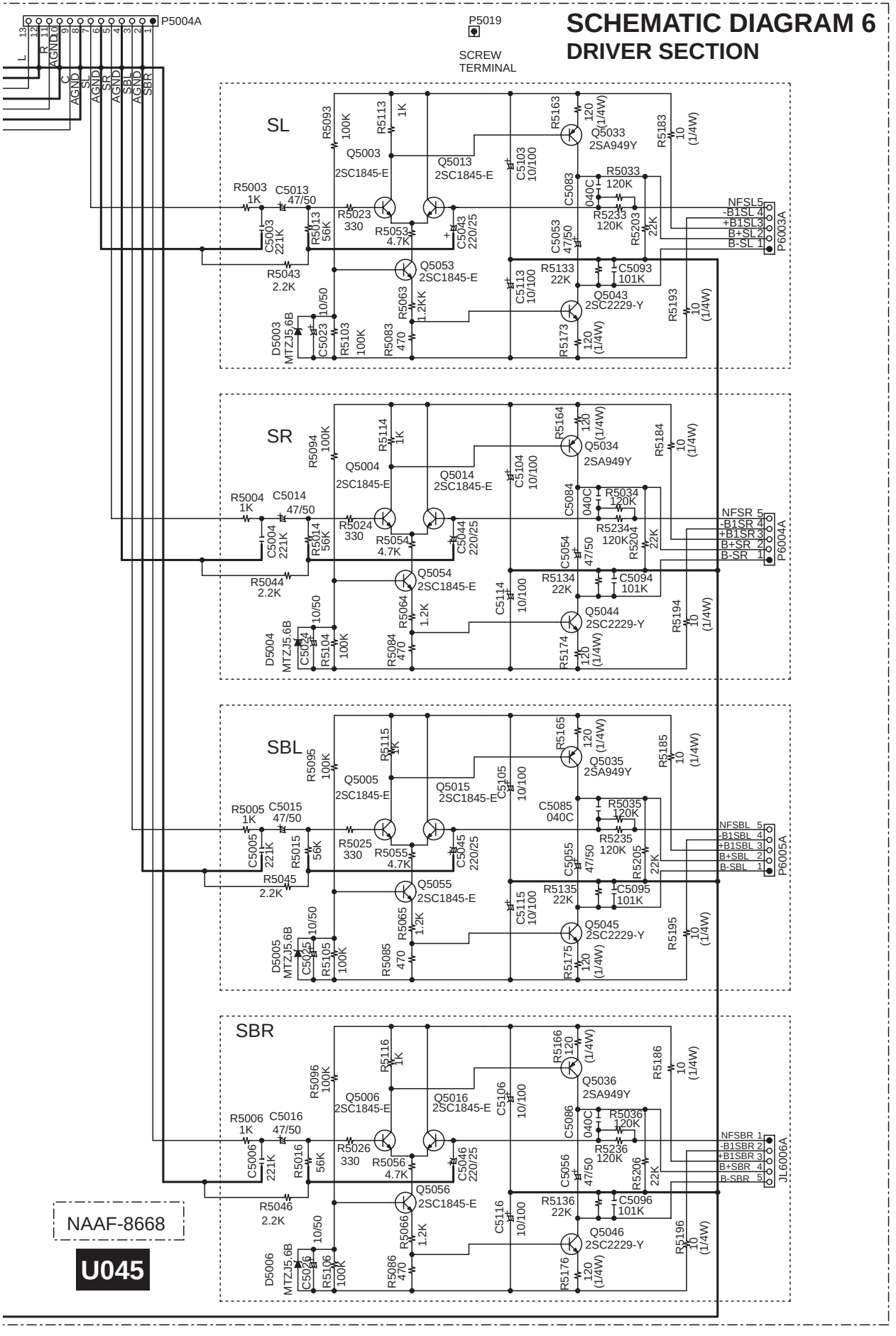

NAAF-8668

U045

SCHEMATIC DIAGRAM 7
POWER SUPPLY SECTION

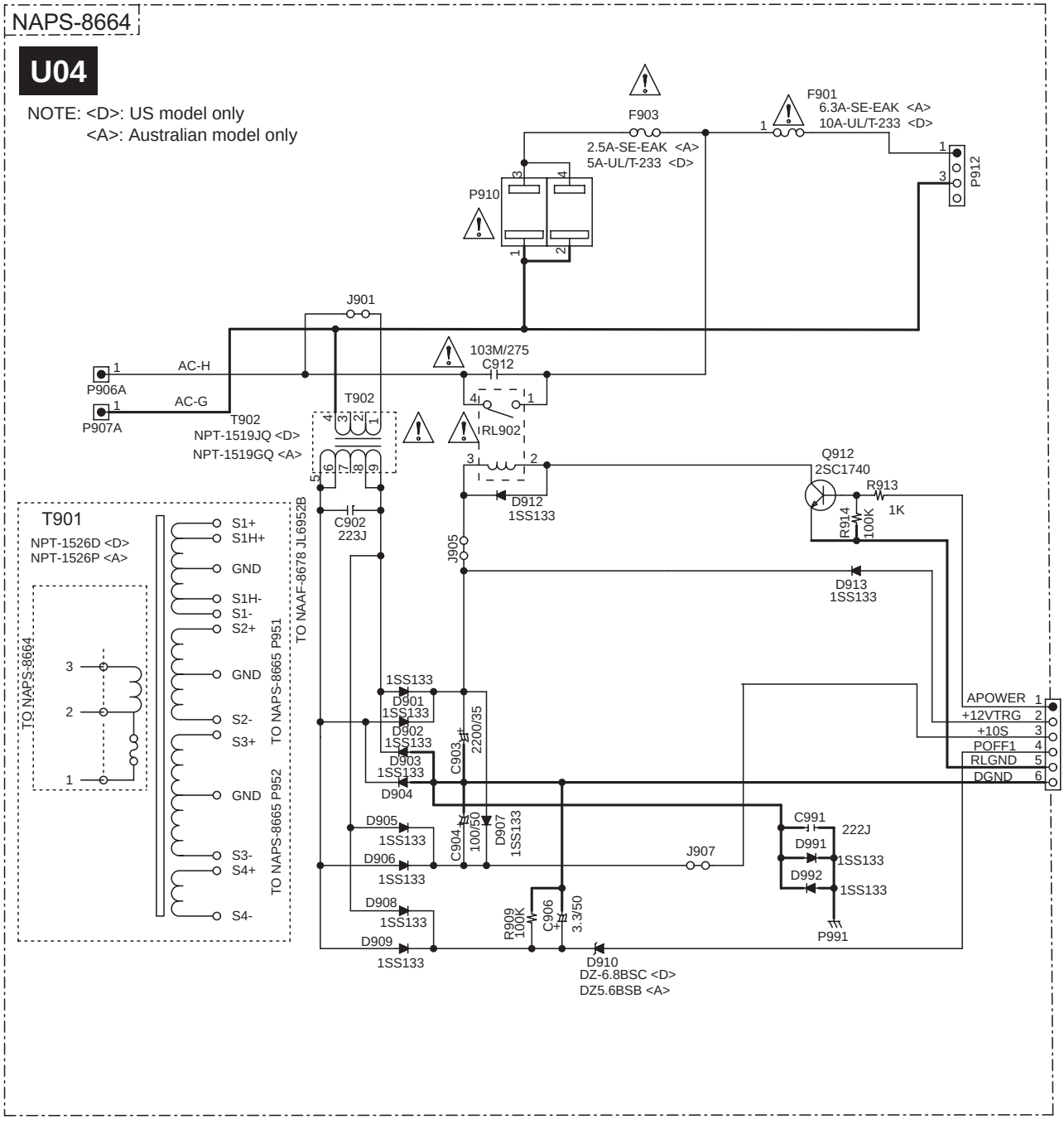

AC120V~60Hz <D>
AC220-230V~50/60Hz <A>

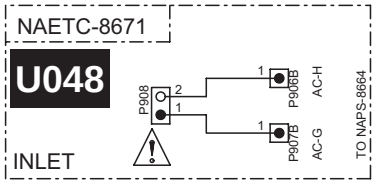

CAUTION
FOR CONTINUED PROTECTION AGAINST FIRE HAZARD, REPLACE ONLY WITH FUSE OF SAME TYPE AND RATING INDICATED.

ATTENTIION
AFIN D'ASSURER UNE PROTECTION PERMANENTE CONTRE LES RISQUES D'INCENDIE, REMPLACER UNIQUEMENT PAR UN FUSIBLE DE MEME TYPE ET CALIBRATION COMME INDIQUE.

THIS SYMBOL LOCATED NEAR THE FUSE INDICATES THAT THE FUSE USED IS SLOW OPERATING TYPE FOR CONTINUED PROTECTION AGAINST FIRE FUSE HAZARD,REPLACE WITH SAME TYPE FUSE. FOR FUSE RATING REFER TO THE MAKING ADJACENT TO THE SYMBOL.

CE SYMBOLE INDIQUE QUE LE FUSIBLE UTLISE EST A LENT. E POUR UNE PROTECTION PERMANENTE,N'UTILISER QUE DES FUSIBLES DE MEME TYPE. CE DARNIER EST INDIQUE LA QU LE PRESENT SYMBOL EST APPOSE.

NOTE

THE COMPONENTS IDENTIFIED BY MARK ⚠ ARE CRITICAL FOR SAFETY.
REPLACE ONLY WITH PART NUMBER SPECIFIED.
ELECTROLYTIC CAPACITORS ARE IN uF/WV.
ALL CAPACITORS ARE IN pF/50WV UNLESS OTHERWISE NOTED.
EX) 030 3pF 330 33pF 331 330pF 333 0.033uF
ALL RESISTORS ARE IN OHMS 1/4WATTS UNLESS OTHERWISE NOTED.
THE THICK LINES ON PC BOARD ARE THE PRINTING SIDE OF THE PARTS
EX PRINTING SIDE
CIRCUIT IS SUBJECT TO CHANGE FOR IMPROVEMENT.

SCHEMATIC DIAGRAM 7
SPEAKER TERMINAL SECTION

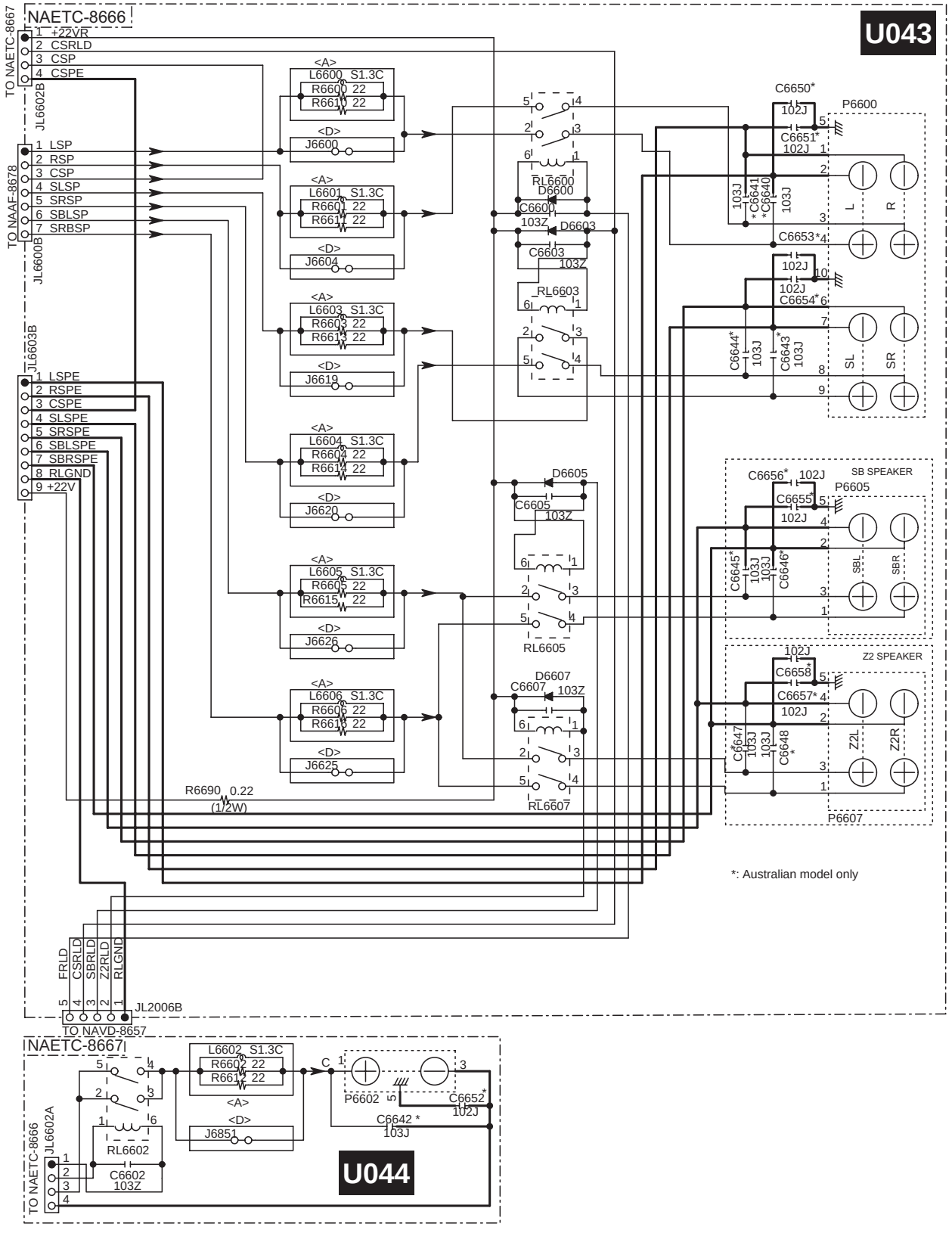

A B C D

SCHEMATIC DIAGRAM 8
POWER SUPPLY SECTION

1 2 3 4 5

NAPS-8665

U042

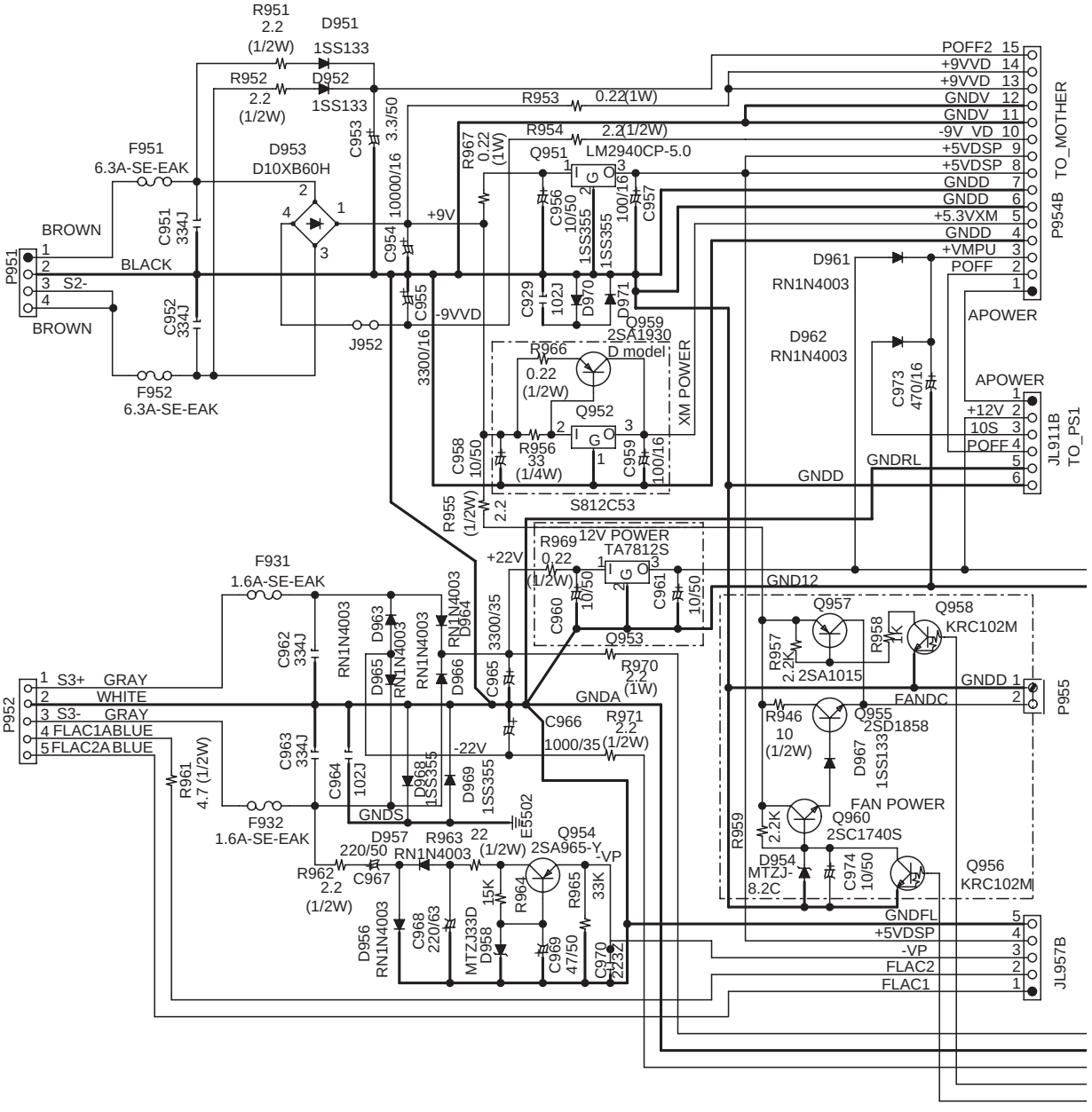

SCHEMATIC DIAGRAM 8
POWER SUPPLY SECTION

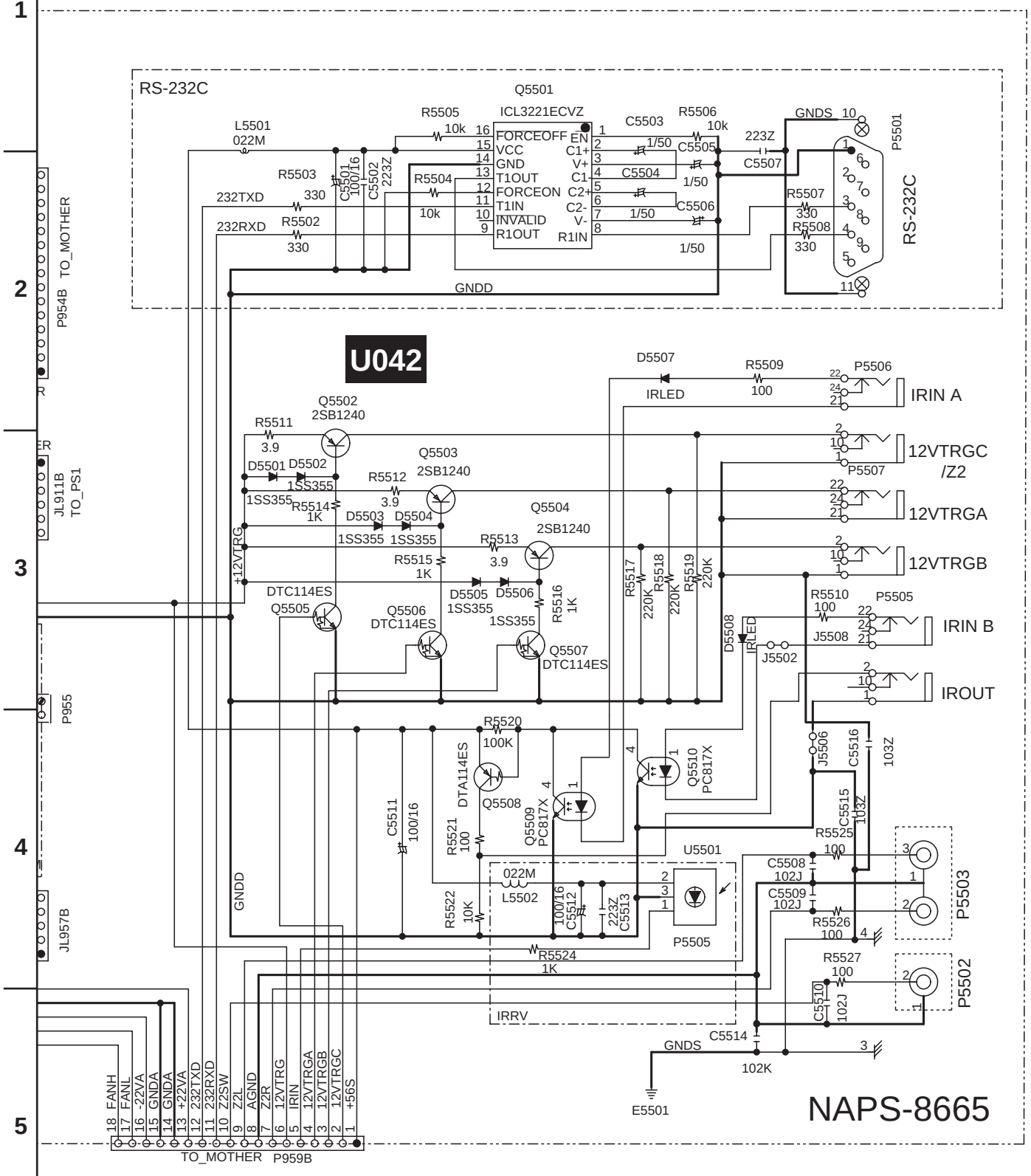

SCHEMATIC DIAGRAM 9 DISPLAY SECTION

NADIS-8683

U07

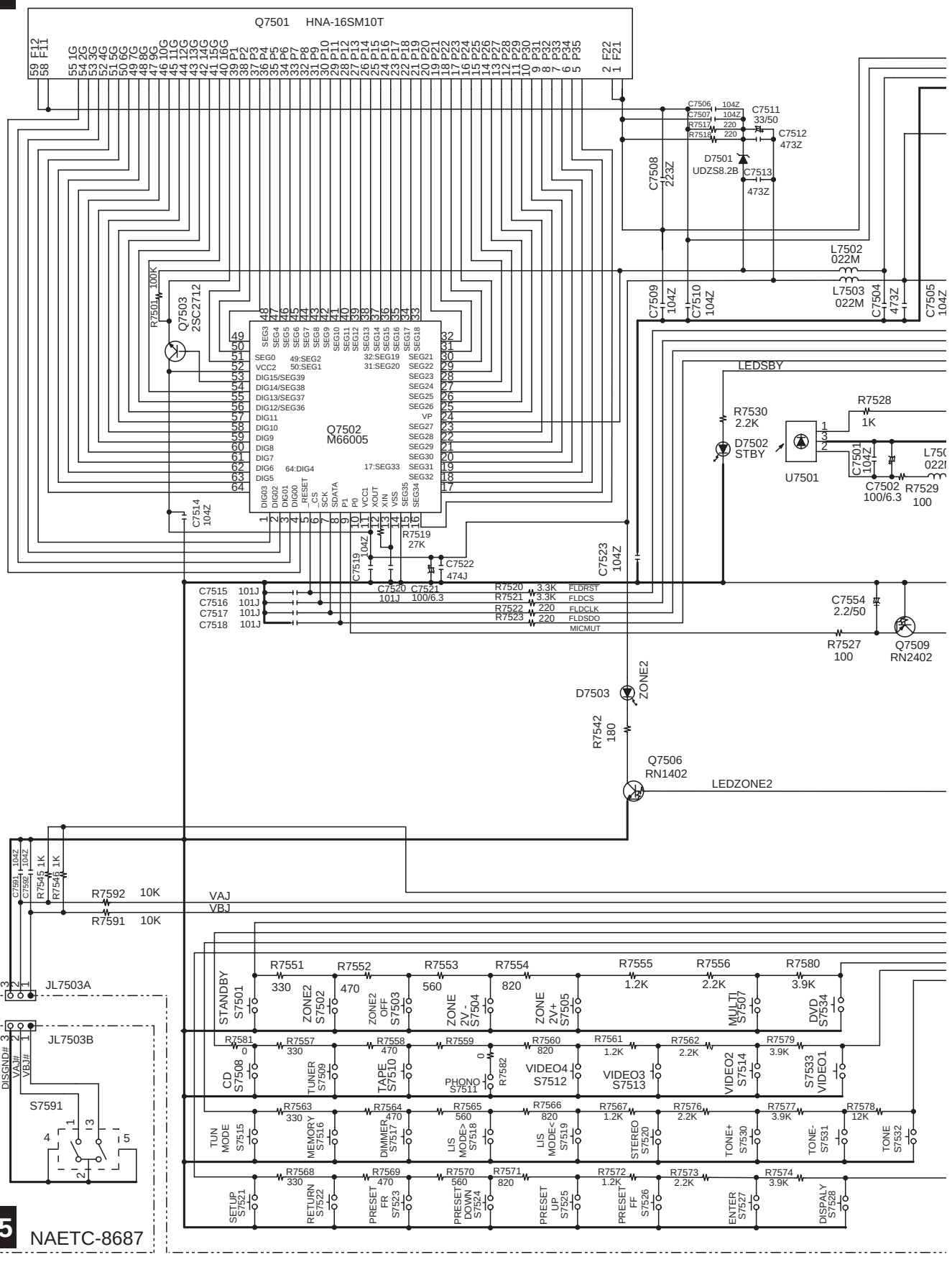

SCHEMATIC DIAGRAM 9 DISPLAY SECTION

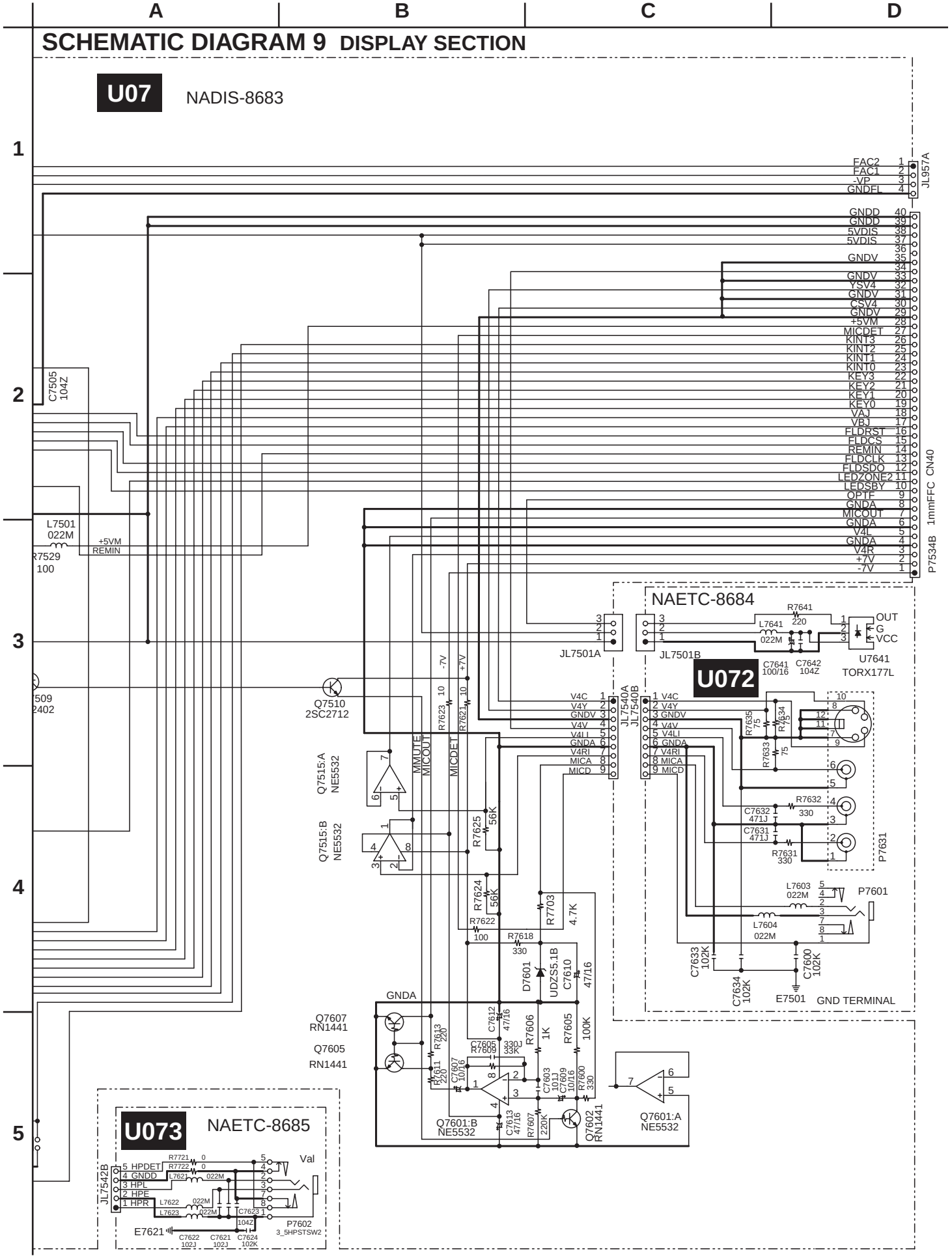

SCHEMATIC DIAGRAM 10

XM RADIO SECTION (North American models)

NARF-8688

U08

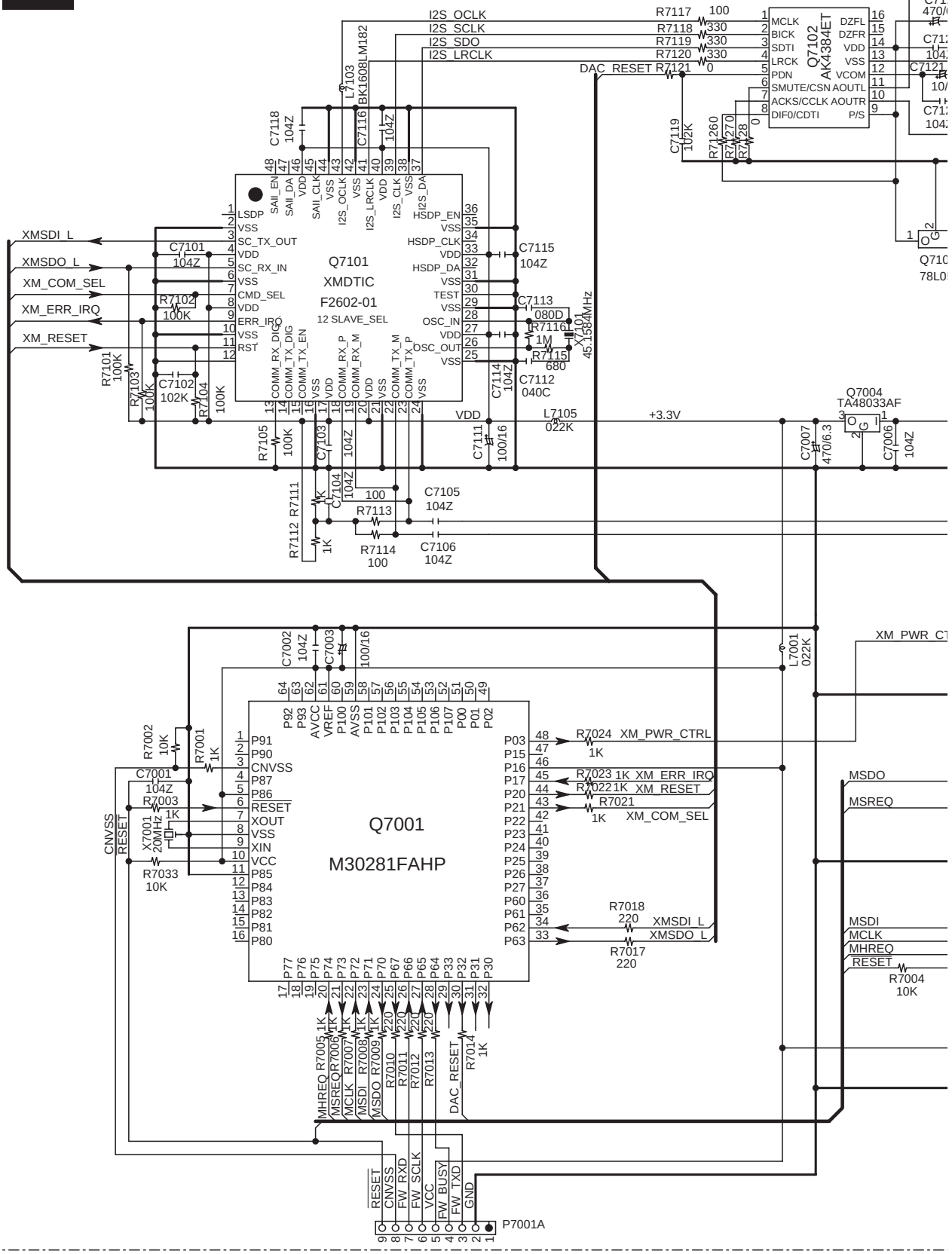

SCHEMATIC DIAGRAM 10

XM RADIO SECTION (North American models)

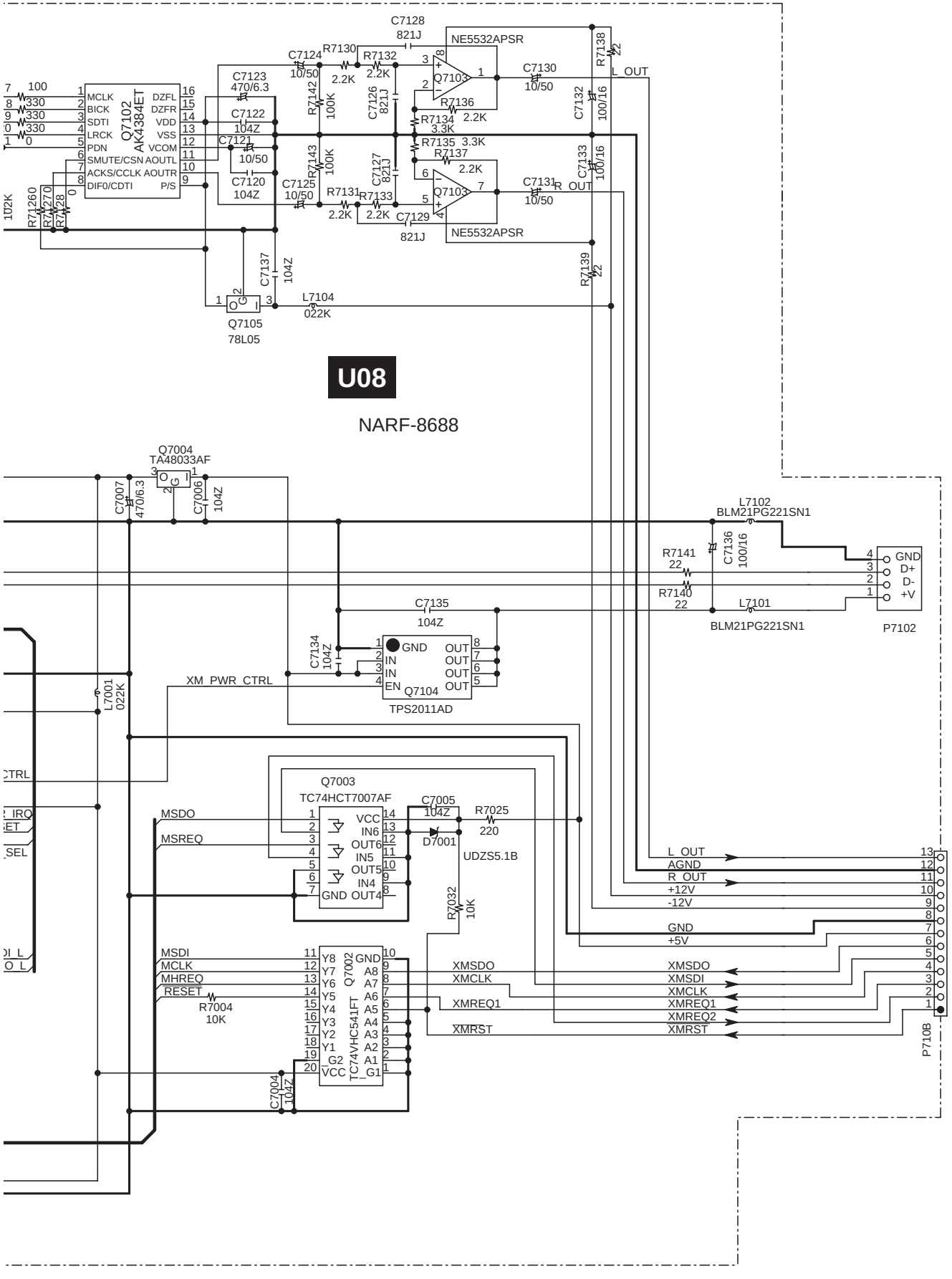

SCHEMATIC DIAGRAM 1

VIDEO SECTION

NAVD-8657

U02

Q2004 LC74763-9836

Q2101 ADV7183B

Q2104 ADV7172

Q2111 NJU7313AM

Q2105 2SC1712-GR

Q2202 2SC2712-GR

Q2201 2SC2712-GR

Q2103 BA18BC0FB

Q2102 BA33BC0FB

Q2107 LA7106M

Q2106 LA7106M

Q2003 NJM2595M

Q2002 NJM2595M

Q2001 NJM2595M

Selector & 6dB AMP

Switch Controller

Video Decoder

Video Encoder

Video AMP with HPF

SPEAKER RELAY DRIVER

P2001 VIDEO3

P2002 VIDEO2

P2003 DVD

P2007 MONITOR

P2004 P2005 JL2006

P2201 COMPONENT 3

P2201 COMPONENT 2

P2201 COMPONENT 1

P2202 COMPONENT OUT

VIDEO1

SCHEMATIC DIAGRAM 2

DSP SECTION

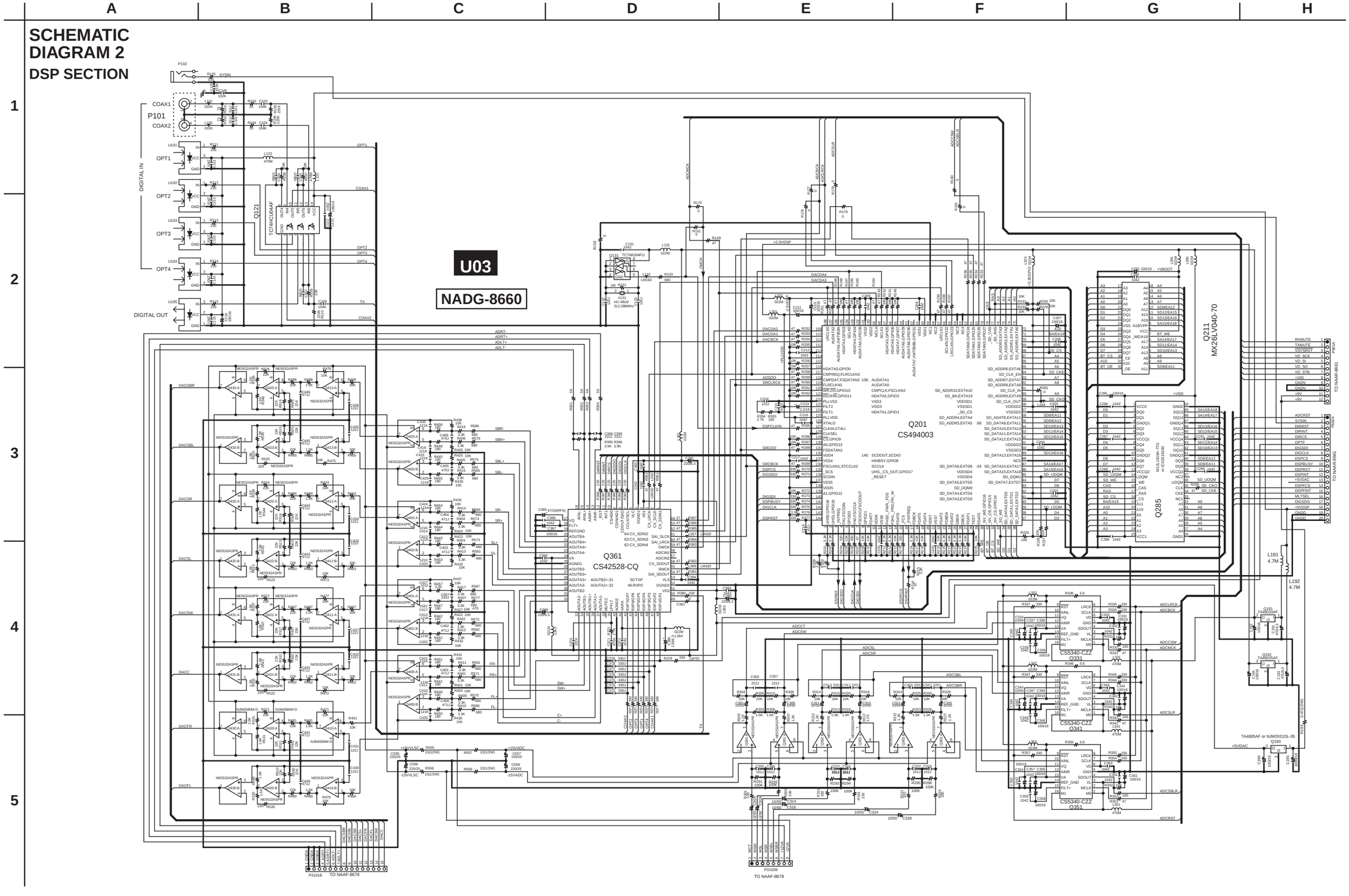

A B C D E F G H

1 2 3 4 5

SCHEMATIC DIAGRAM 4
PREAMPLIFIER SECTION

U06

NAAF-8678(1/2)

P3010

P3001 PHONO
CD
P3002 TAPE_OUT
TAPE
P3003 VIDEO2_OUT
VIDEO3
P3004 VIDEO1_OUT
VIDEO2
P3005 DVD
VIDEO1
P3006 SBL/SBR
C/SW
P3008 SL/SR
FL/FR
PREOUT
P3009 SBL/SBR
C/SW

P3101A
P3102A
P3103A
P3104A
P3105A

DACSBR
DACSBL
FSWDATA
FSWCLK
FSWSTB
V2_RO
V2_LO
V1_RO
V1_LO
SBROUT
SBLOUT
SROUT
SLOUT
COUT
ROUT
LOUT
SPRLF
SPRLSB
VLDATA
VLCLK
VLSTB
Z2R
Z2L
Z2VMUT
Z2VDATA
Z2VCLK
Z2VLCH

Q3002 NJU7311AM
Q3003 NJW1157
Q3004:A NE5532
Q3004:B NE5532
Q3005 78L07
Q3006 79L07
Q3007:A NE5532
Q3007:B NE5532
Q3009 BD3814
Q3501 LM2940CT-5.0
Q3506 NJM7905FA
Q3507 NJM7812FA
Q3508 NJM7912FA
Q3001:A NE5532
Q3001:B NE5532

To schematic 5

SCHEMATIC DIAGRAM 3
MICROPROCESSOR SECTION

U032

NAAR-8661

P7534A TO DISPLAY (NADIS-8688)

P702 TO FLASH WRITER

JL703B TO THERMAL SENSOR NAETC-8680

P710A TO XM RADIO NARF-8688 DD model only

JL7452A TO HEAD PHONE NARF-8688

P959A TO POWER SUPPLY NAPS-8665

TO POWER SUPPLY NAPS-8665 P954A

P601B TO DSP/CODEC NADG-8660

P602B TO DSP/CODEC NADG-8660

P2004A TO VIDEO NAVD-8657

P2005A TO VIDEO NAVD-8657

P3103B

P3104B TO VOLUME/AMP NAAF-8678

P3105B

P701A TO TUNER PACK

MODEL	R605 R606 R608 R609
MDD-TYPE	YES
other	NO

DD	PA
R712 33K	10K
R713 56K	33K
R714 NC	10K
R715 0	NC

SCHEMATIC DIAGRAM 5
POWER AMPLIFIER SECTION

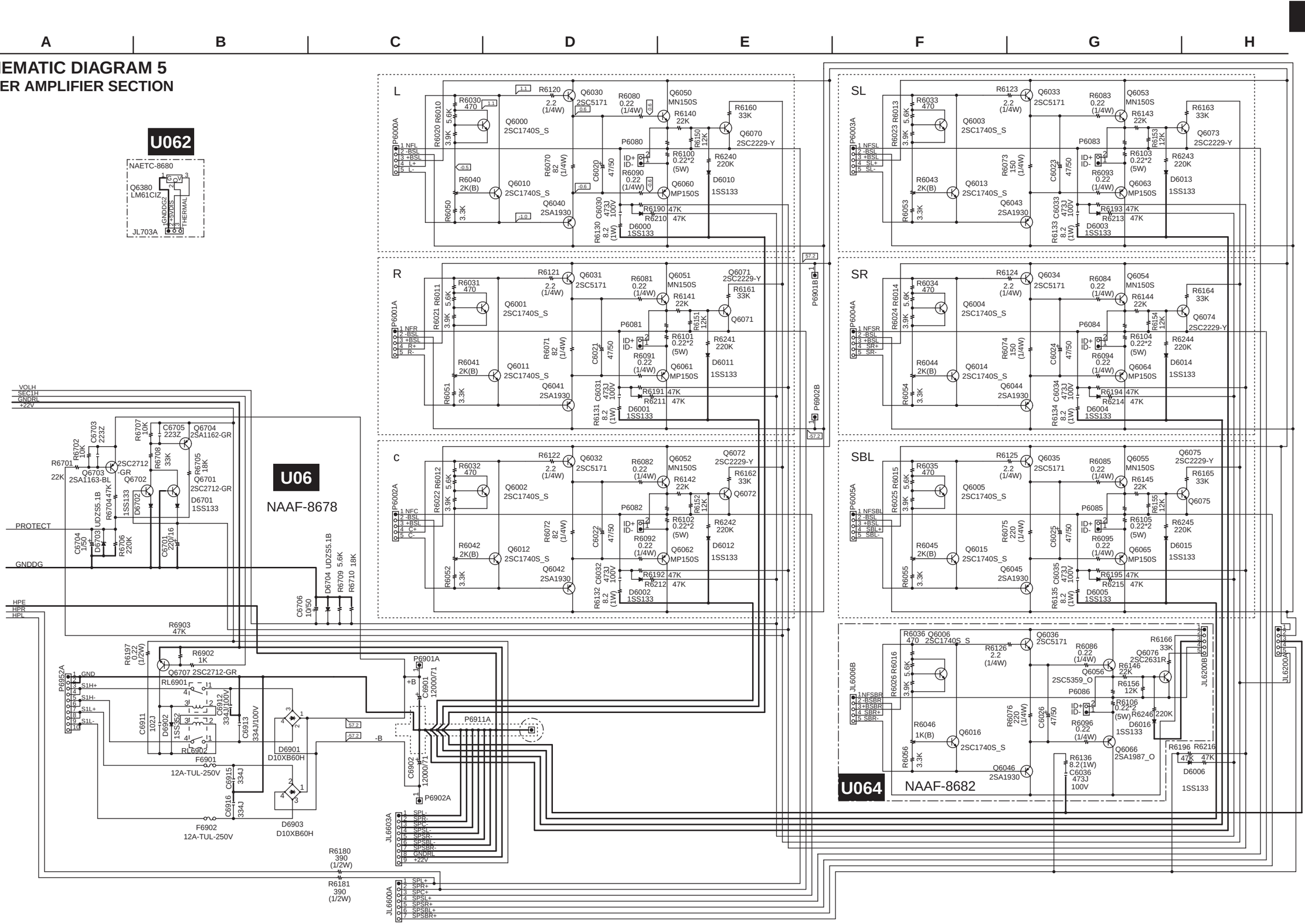

SCHEMATIC DIAGRAM 6
DRIVER SECTION

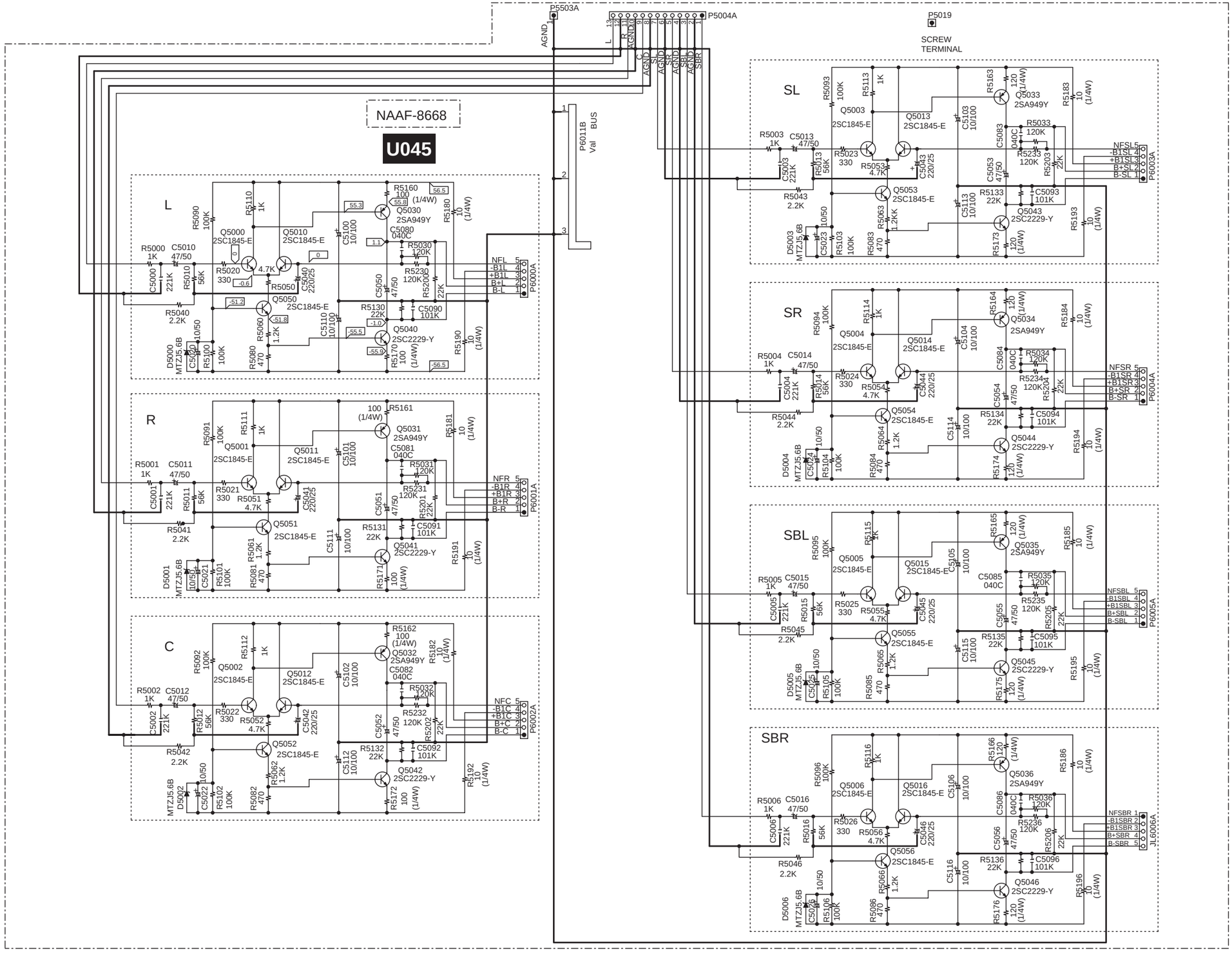

SCHEMATIC DIAGRAM 7
POWER SUPPLY SECTION

NAPS-8664

U04

NOTE: <D>: US model only
<A>: Australian model only

F903 2.5A-SE-EAK <A> 5A-UL/T-233 <D>
F901 6.3A-SE-EAK <A> 10A-UL/T-233 <D>
P910
P912
J901
P906A AC-H
P907A AC-G
T902 NPT-1519JQ <D> NPT-1519GQ <A>
103M/275 C912
IRL902
Q912 2SC1740
R913 1K
R914 100K
D912 1SS133
D913 1SS133
T901 NPT-1526D <D> NPT-1526P <A>
S1+ S1H+ GND S1H- S1- S2+ GND S2- S3+ GND S3- S4+ S4-
TO NAPS-8664
TO NAPS-8665 P951
TO NAPS-8665 P952
TO NAAF-8678 JL6952B
C902 223J
J905
D901 1SS133
D902 1SS133
D903 1SS133
D904
D905 1SS133
D906 1SS133
D908 1SS133
D909 1SS133
C903 2200/35
C904 100/50
D907 1SS133
R909 10K
C906 3.3/50
D910 DZ-6.8BSC <D> DZ5.6BSB <A>
J907
C991 222J
D991 1SS133
D992 1SS133
P991
APOWER +12VTRG +10S POFF1 RLGND DGND
JL911A

AC120V~60Hz <D>
AC220-230V~50/60Hz <A>

NAETC-8671

U048

P908 P9085 AC-H P9075 AC-G TO NAPS-8664
INLET

NAETC-8666

U043

TO NAETC-8667
1 +22VR 2 CSRLD 3 CSP 4 CSPE
JL6602B
TO NAAF-8678
1 LSP 2 RSP 3 CSP 4 SLSP 5 SRSP 6 SBLSP 7 SRBSP
JL6600B
JL6603B
1 LSPE 2 RSPE 3 CSPE 4 SLSPE 5 SRSPE 6 SBLSPE 7 SBRSPE 8 RLGND 9 +22V
<A> L6600 S1.3C R6600 22 R6610 22
<D> J6600
<A> L6601 S1.3C R6601 22 R6611 22
<D> J6604
<A> L6603 S1.3C R6603 22 R6613 22
<D> J6618
<A> L6604 S1.3C R6604 22 R6614 22
<D> J6620
<A> L6605 S1.3C R6605 22 R6615 22
<D> J6626
<A> L6606 S1.3C R6606 22 R6616 22
<D> J6625
R6690 0.22 (1/2W)
RL6600 D6600 C6600 103Z D6603
C6603 103Z RL6603
RL6605 D6605 C6605 103Z
RL6607 D6607 C6607 103Z
C6650* 102J P6600
C6651* 102J
C6641* C6640* 103J
C6653* 102J
C6654* 102J
C6644* C6643* 103J
L R SL SR
C6656* 102J SB SPEAKER P6605
C6655* 102J
C6645* C6646* 103J
SBL SBR
Z2 SPEAKER P6607
C6658 102J
C6657* 102J
C6647 C6648* 103J 103J
Z2L Z2R
*: Australian model only
FRLD CSRLD SBRLD Z2RLD RLGND
JL2006B
TO NAVD-8657

NAETC-8667

L6602 S1.3C R6602 22 R6612 22
<A> <D> J6852
RL6602 C6602 103Z
P6602 C6652* 102J C6642* 103J

U044

TO NAETC-8666 JL6602A

CAUTION
FOR CONTINUED PROTECTION AGAINST FIRE HAZARD, REPLACE ONLY WITH FUSE OF SAME TYPE AND RATING INDICATED.

ATTENTIION
AFIN D'ASSURER UNE PROTECTION PERMANENTE CONTRE LES RISQUES D'INCENDIE, REMPLACER UNIQUEMENT PAR UN FUSIBLE DE MEME TYPE ET CALIBRATION COMME INDIQUE.

THIS SYMBOL LOCATED NEAR THE FUSE INDICATES THAT THE FUSE USED IS SLOW OPERATING TYPE. FOR CONTINUED PROTECTION AGAINST FIRE FUSE HAZARD,REPLACE WITH SAME TYPE FUSE. FOR FUSE RATING REFER TO THE MAKING ADJACENT TO THE SYMBOL.

CE SYMBOLE INDIQUE QUE LE FUSIBLE UTLISE EST A LENT. E POUR UNE PROTECTION PERMANENTE.NUTILISER QUE DES FUSIBLES DE MEME TYPE. CE DARNIER EST INDIQUE LA QU LE PRESENT SYMBOL EST APPOSE.

NOTE
THE COMPONENTS IDENTIFIED BY MARK ⚠ ARE CRITICAL FOR SAFETY.
REPLACE ONLY WITH PART NUMBER SPECIFIED.
ELECTROLYTIC CAPACITORS ⏚ ARE IN uF/WV.
ALL CAPACITORS ARE IN pF/50WV UNLESS OTHERWISE NOTED.
EX) 030 3pF 330 33pF 331 330pF 333 0.033uF
ALL RESISTORS ARE IN OHMS 1/4WATTS UNLESS OTHERWISE NOTED.
THE THICK LINES ON PC BOARD ARE THE PRINTING SIDE OF THE PARTS
EX ○○○ PRINTING SIDE
CIRCUIT IS SUBJECT TO CHANGE FOR IMPROVEMENT.

SCHEMATIC DIAGRAM 8
POWER SUPPLY SECTION

NAPS-8665

U042

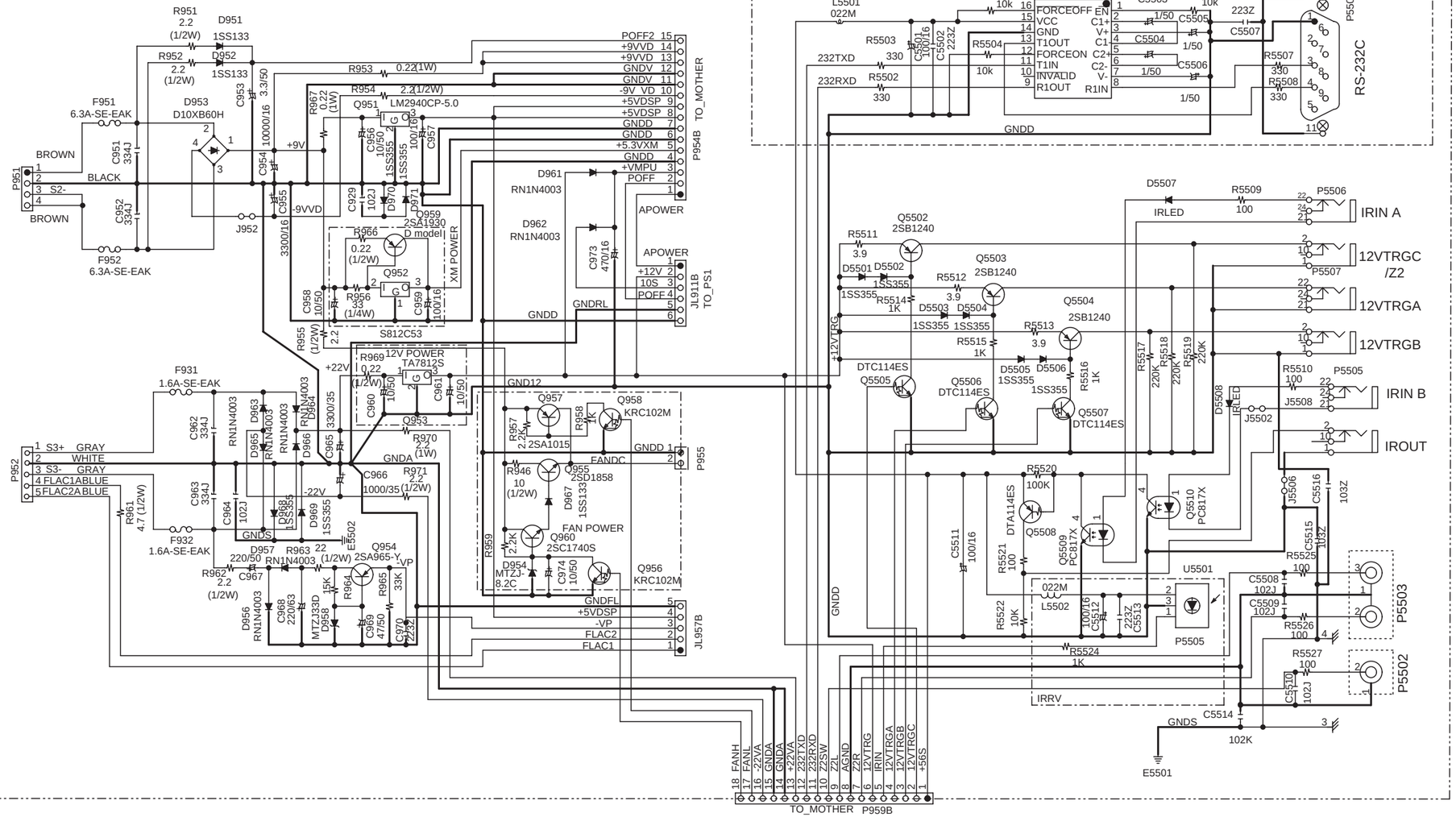

SCHEMATIC DIAGRAM 9
DISPLAY SECTION

NADIS-8683

U07

Q7501 HNA-16SM10T

Q7502 M66005

Q7503 2SC2712

Q7506 RN1402

Q7509 RN2402

Q7510 2SC2712

Q7605 RN1441

Q7607 RN1441

Q7602 RN1441

D7501 UDZS8.2B

D7502 STBY

D7503 ZONE2

U7501

LEDSBY

LEDZONE2

VAJ

VBJ

JL7503A

JL7503B

S7591

P7534B 1mmFFC CN40

JL7501A

JL7501B

NAETC-8684

U072

U7641 TORX177L

E7501 GND TERMINAL

Q7515:A NE5532

Q7515:B NE5532

Q7601:A NE5532

Q7601:B NE5532

MMUTE

MICOUT

MICDET

P7631

P7601

U075 NAETC-8687

U073 NAETC-8685

JL7542B

P7602 3_5HPSTSW2

E7621

SCHEMATIC DIAGRAM 10
XM RADIO SECTION (North American models)

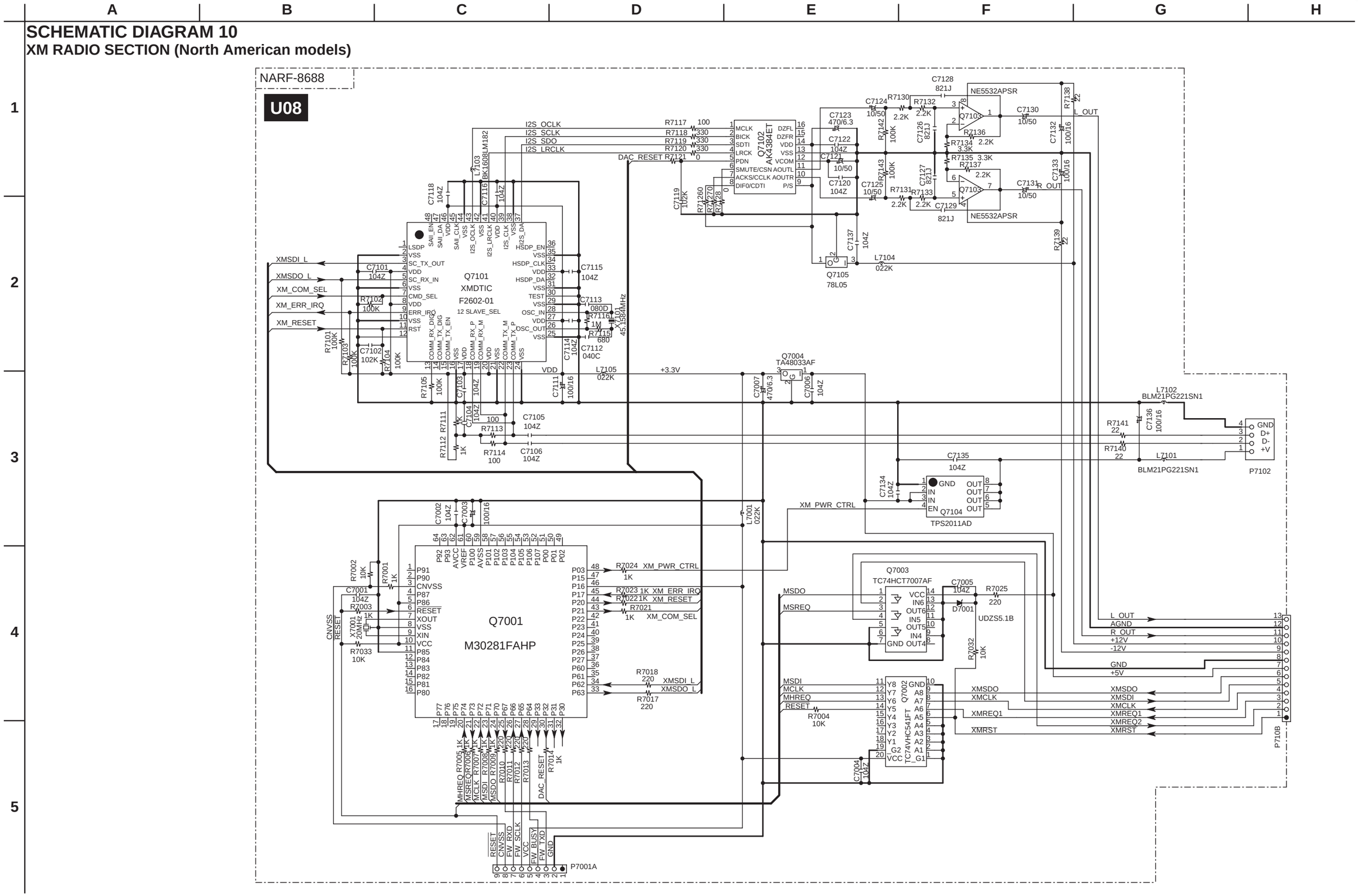

PRINTED CIRCUIT BOARD CONNECTION DIAGRAM

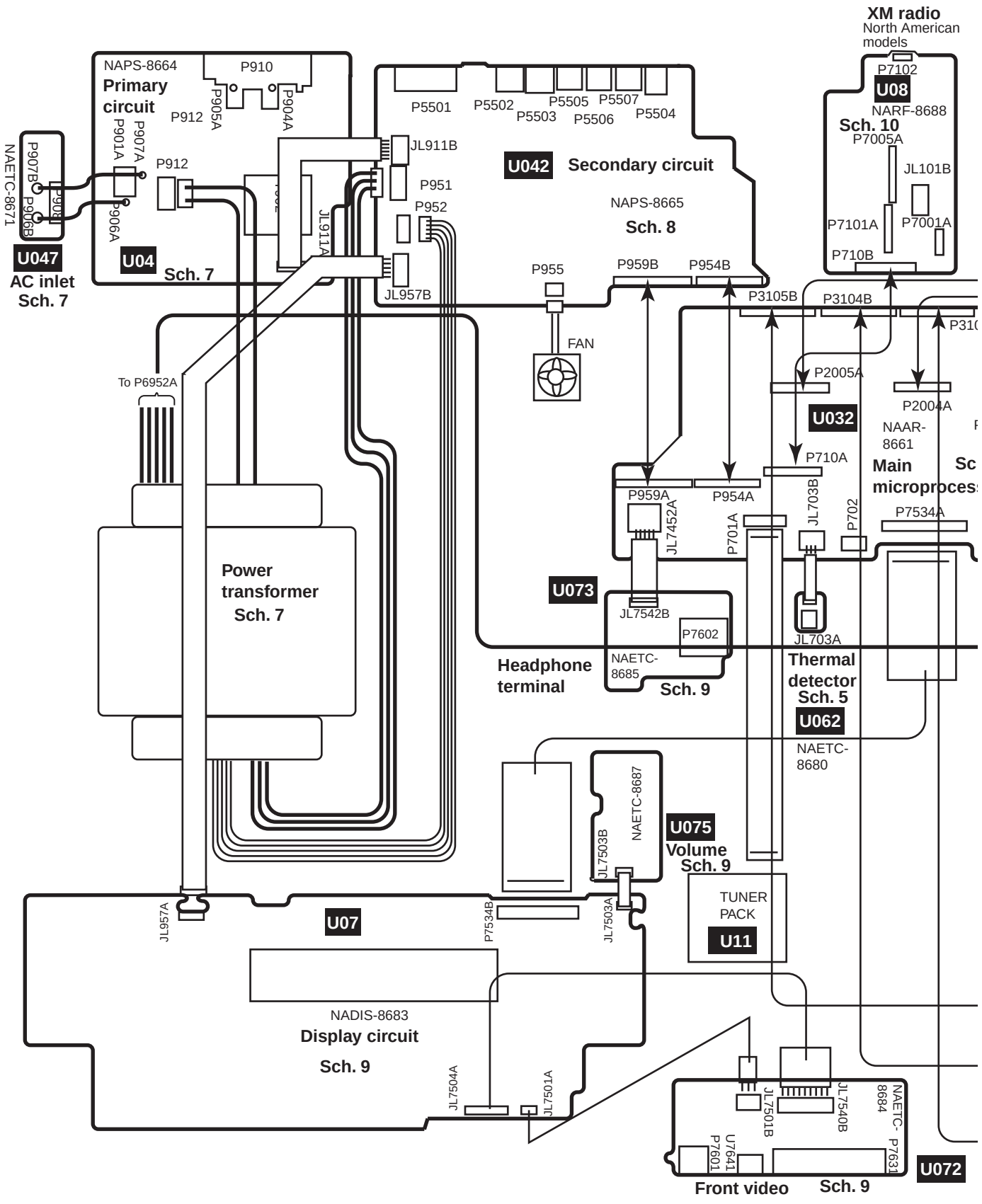

PRINTED CIRCUIT BOARD CONNECTION DIAGRAM

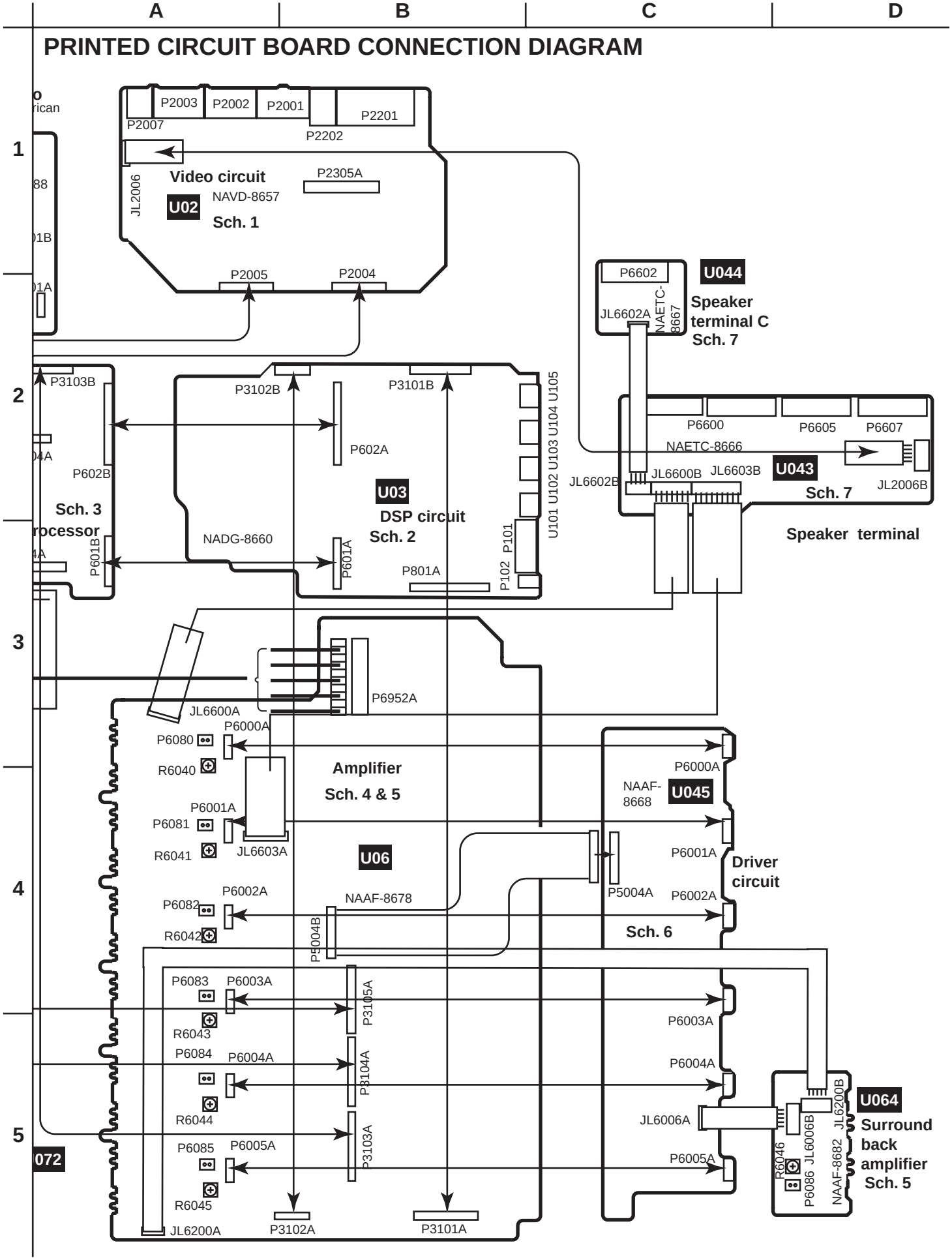

PRINTED CIRCUIT BOARD CONNECTION DIAGRAM

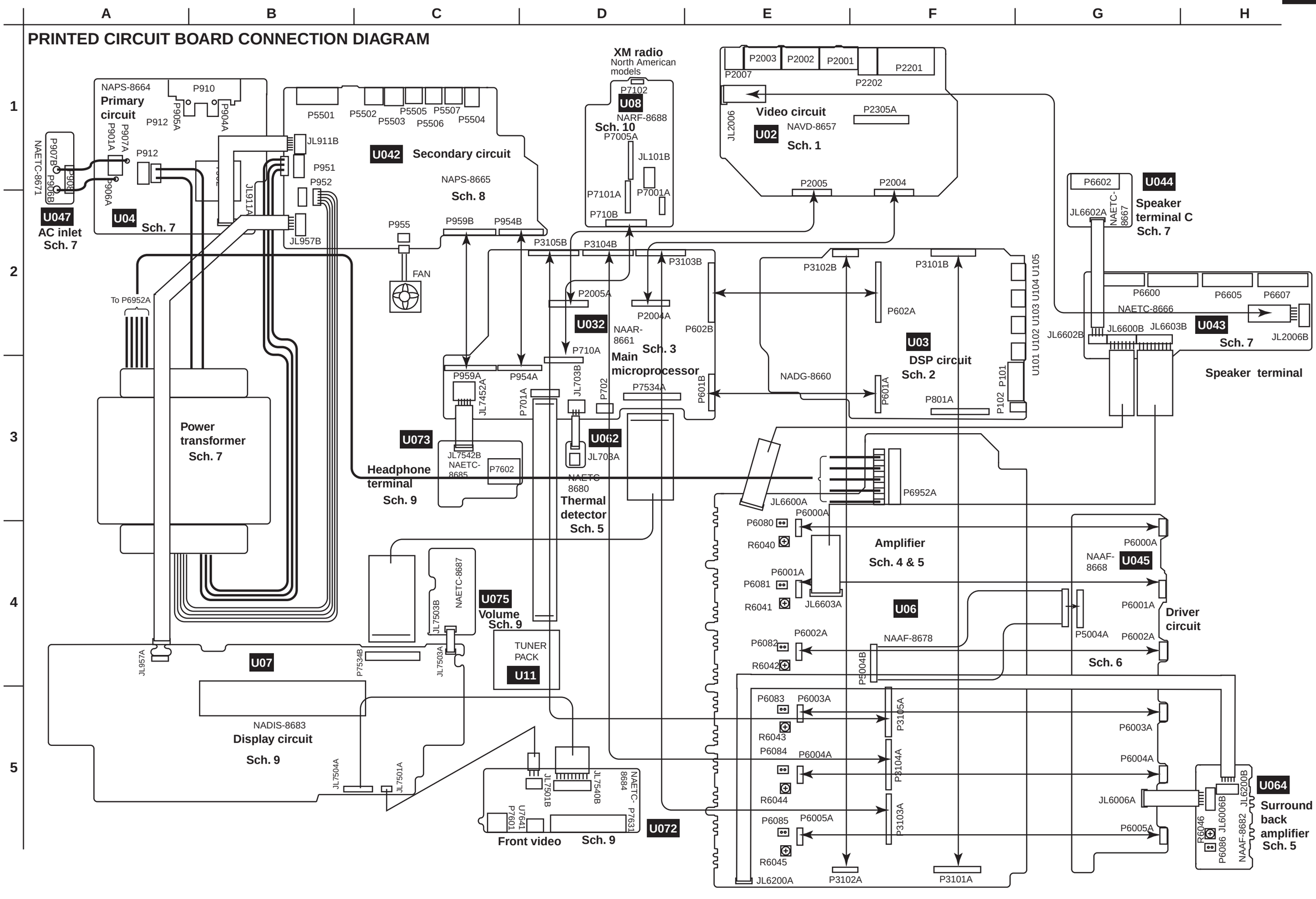

	A	B	C	D	E

PRINTED CIRCUIT BOARD VIEW 1-1
Digital section

U032 NAAR-8661, Main microprocessor PC board

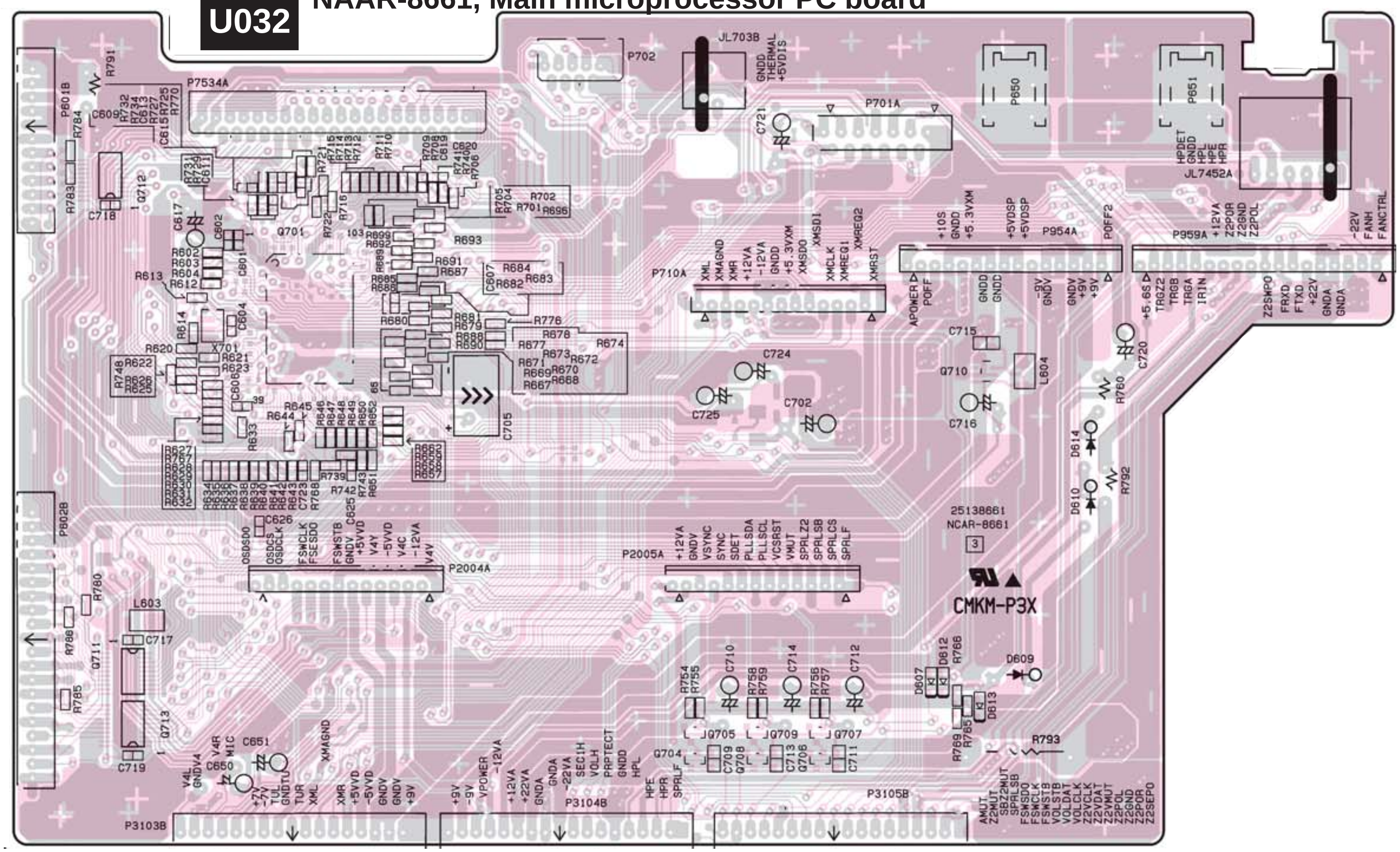

1
2
3
4

A	B	C	D	E

1

2

3

4

PRINTED CIRCUIT BOARD VIEW 1-1
Digital section

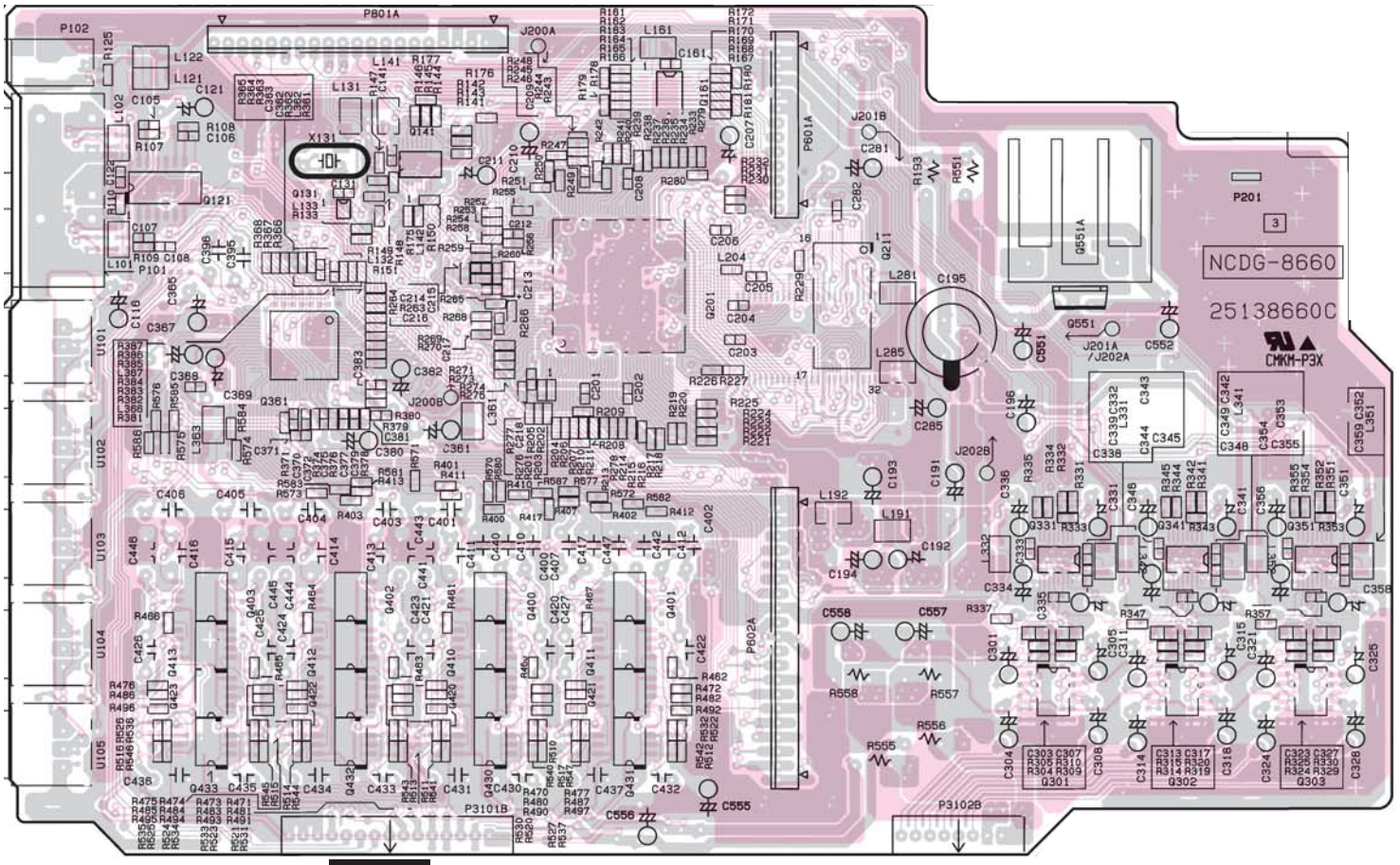

U03 NADG-8660, DSP circuit PC board

PRINTED CIRCUIT BOARD VIEW 1-2
Digital section

NAAR-8661,Main microprocessor PC board **U032**

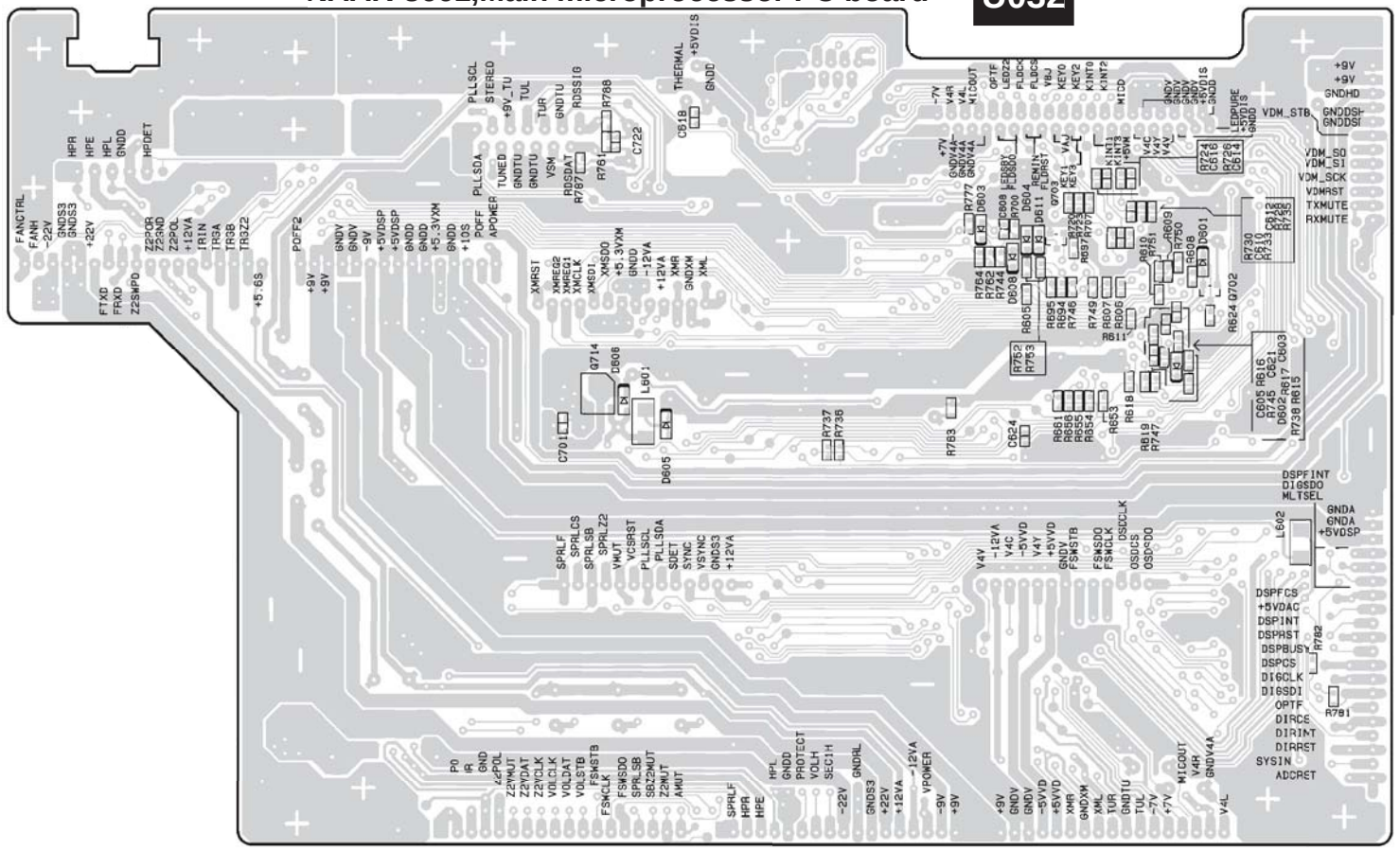

PRINTED CIRCUIT BOARD VIEW 1-2
Digital section

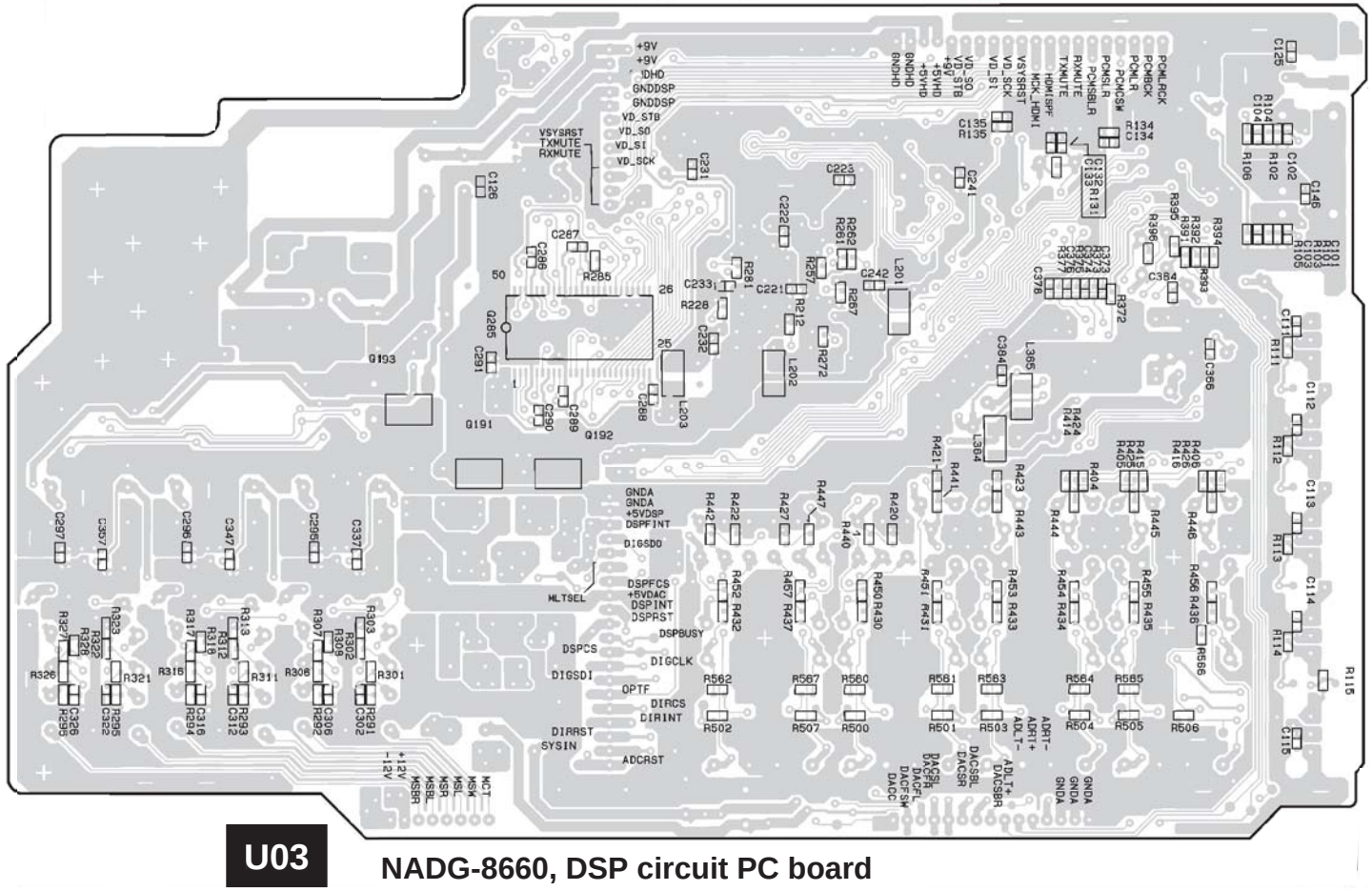

U03 NADG-8660, DSP circuit PC board

PRINTED CIRCUIT BOARD VIEW 2 Amplifier section

NAAF-8678, Power amplifier PC board

U06

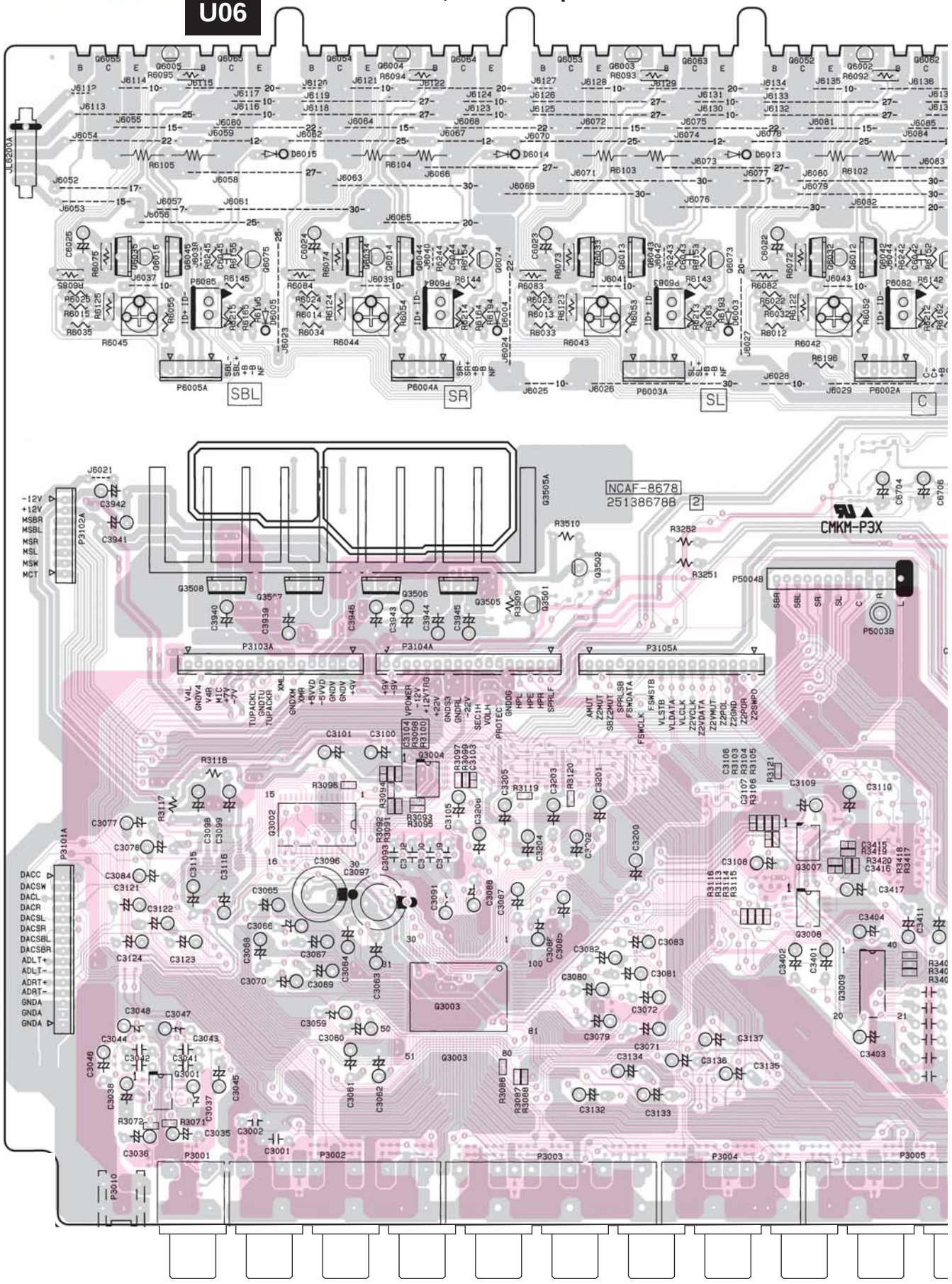

PRINTED CIRCUIT BOARD VIEW 2 Amplifier section

NAAF-8678, Power amplifier PC board

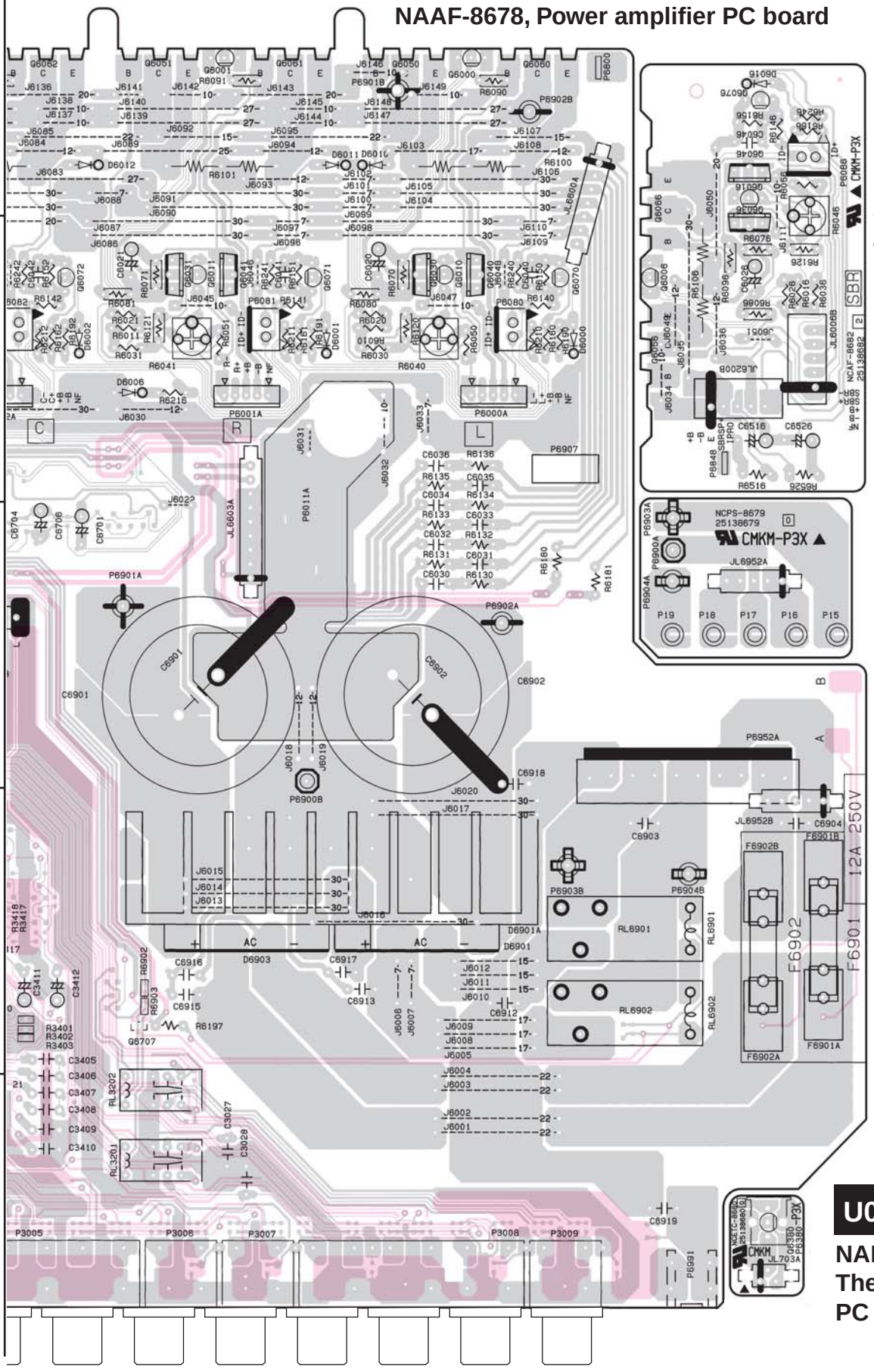

U064

NAAF-8682, Surround back amplifier PC board

U061

NAPS-8679, Power transformer PC board

U06

U062

NAETC-8680, Thermal detector PC board

PRINTED CIRCUIT BOARD VIEW 2-2 Amplifier section

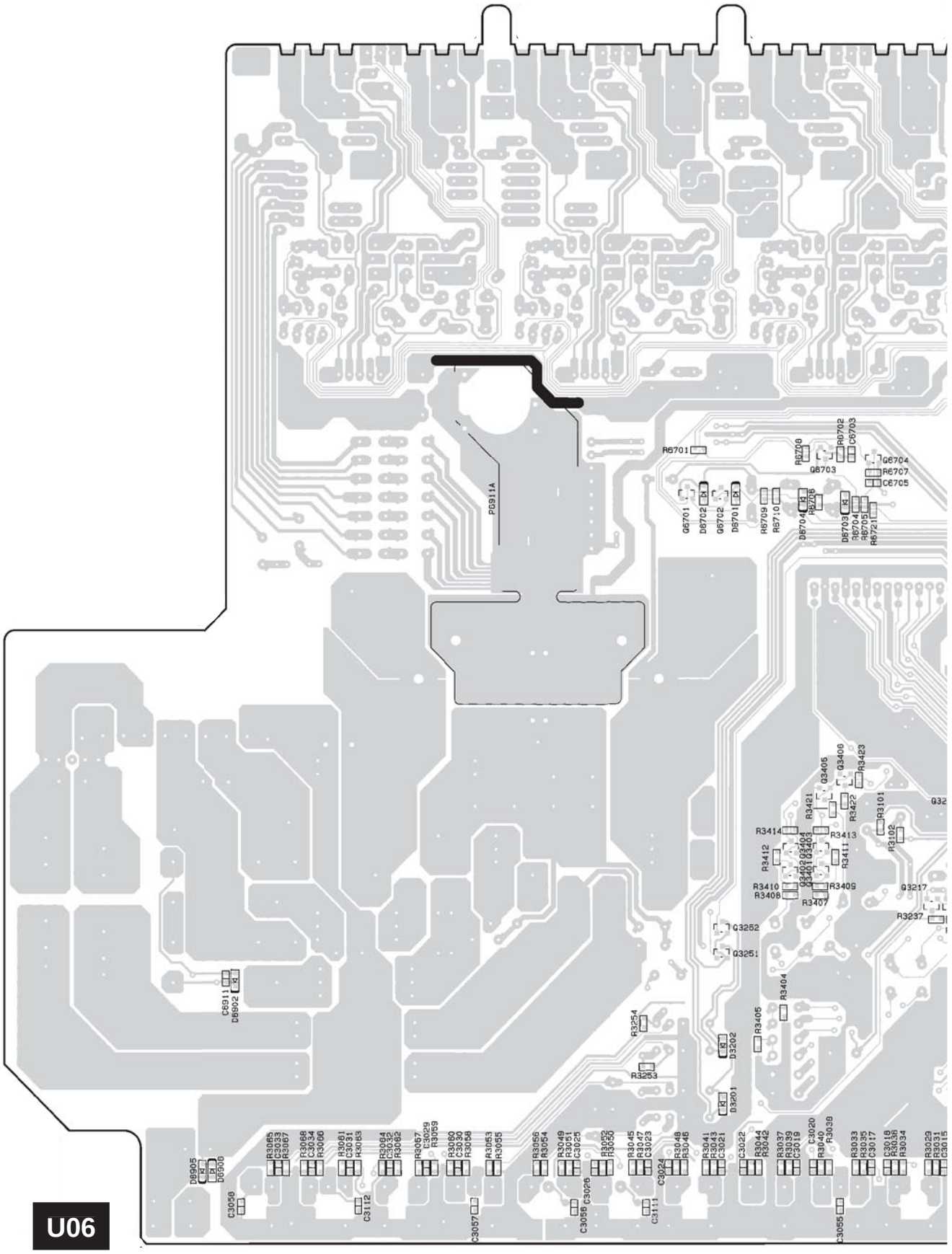

NAAF-8678, Power amplifier PC board

PRINTED CIRCUIT BOARD VIEW 2-2 Amplifier section

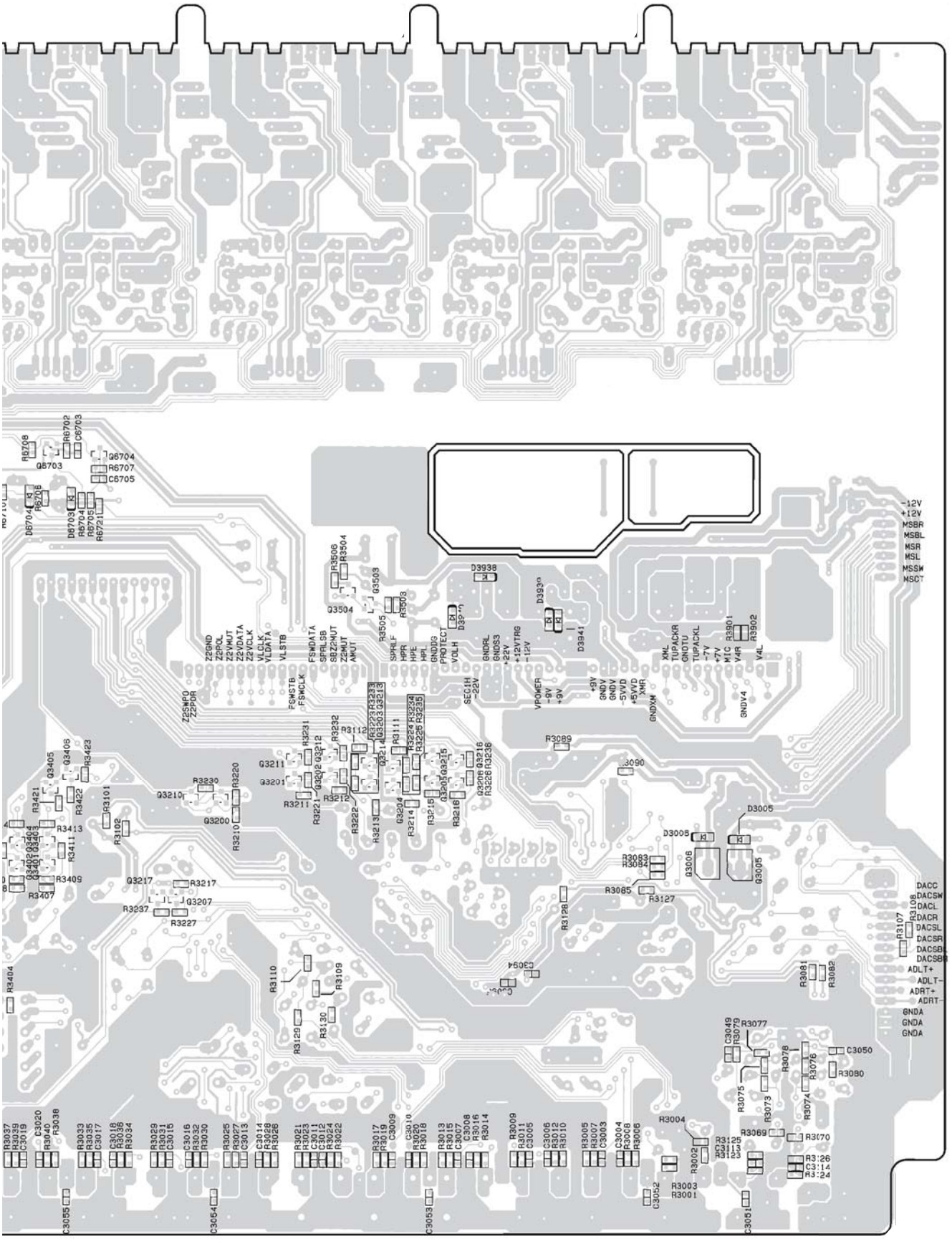

PRINTED CIRCUIT BOARD VIEW 3
DISPLAY SECTION

U072

NAETC-8684,
Front video PC b

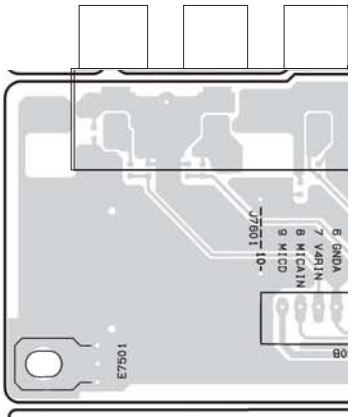

U07

NADIS-8683,
Display circuit PC board

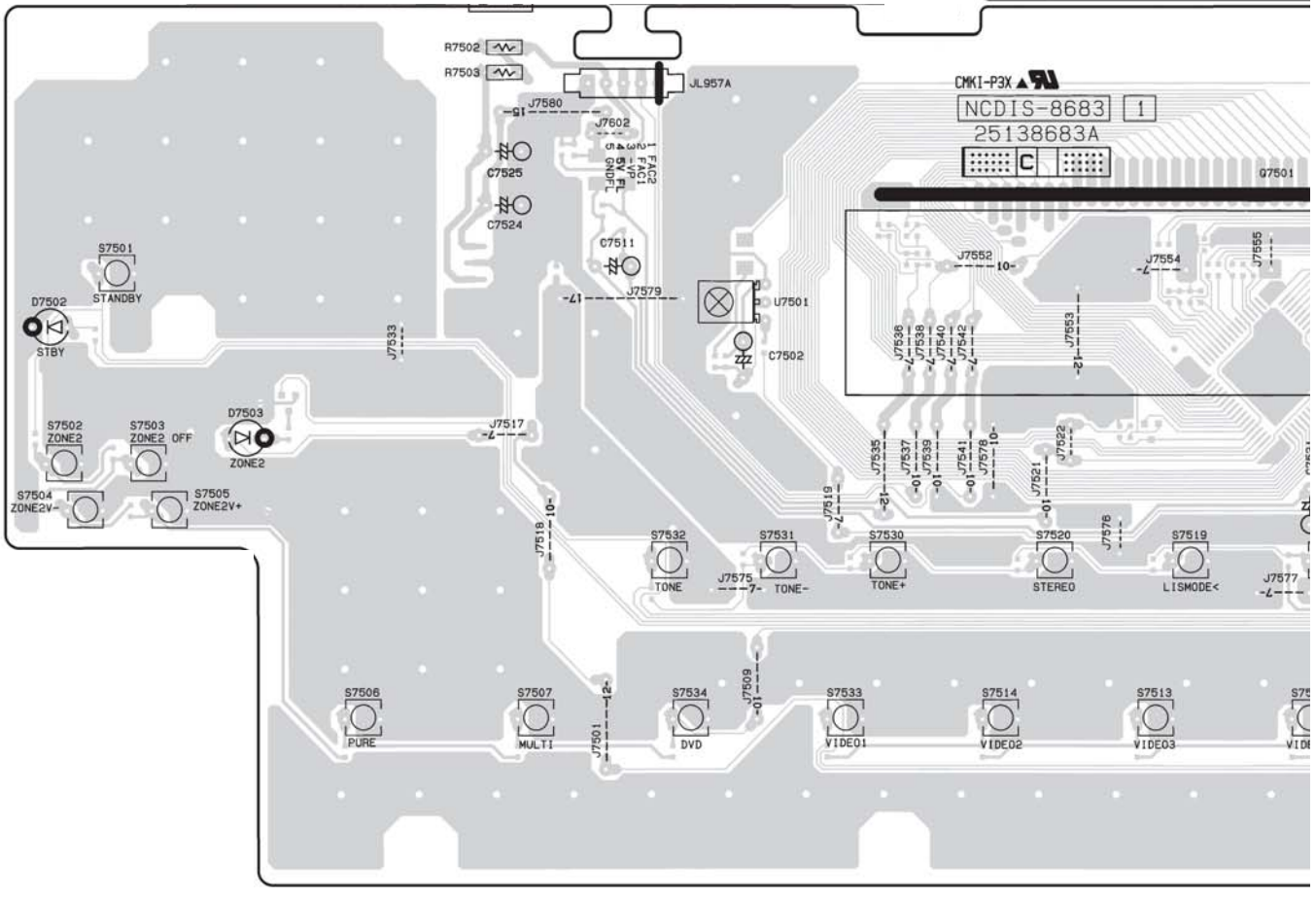

PRINTED CIRCUIT BOARD VIEW 3
DISPLAY SECTION

U073
NAETC-8685,
Headphone terminal PC board

U075
NAETC-8687,
Volume PC board

34,
› PC board

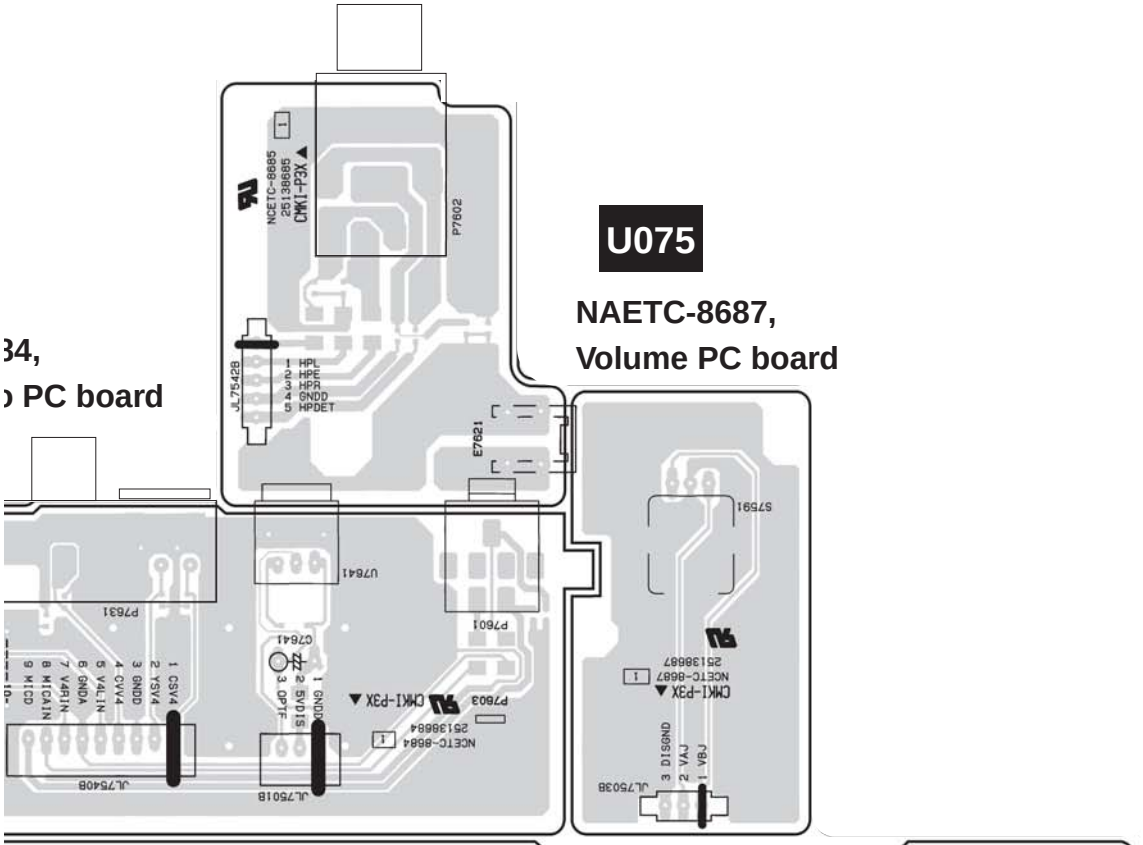

U07
NADIS-8683,
Display circuit PC board

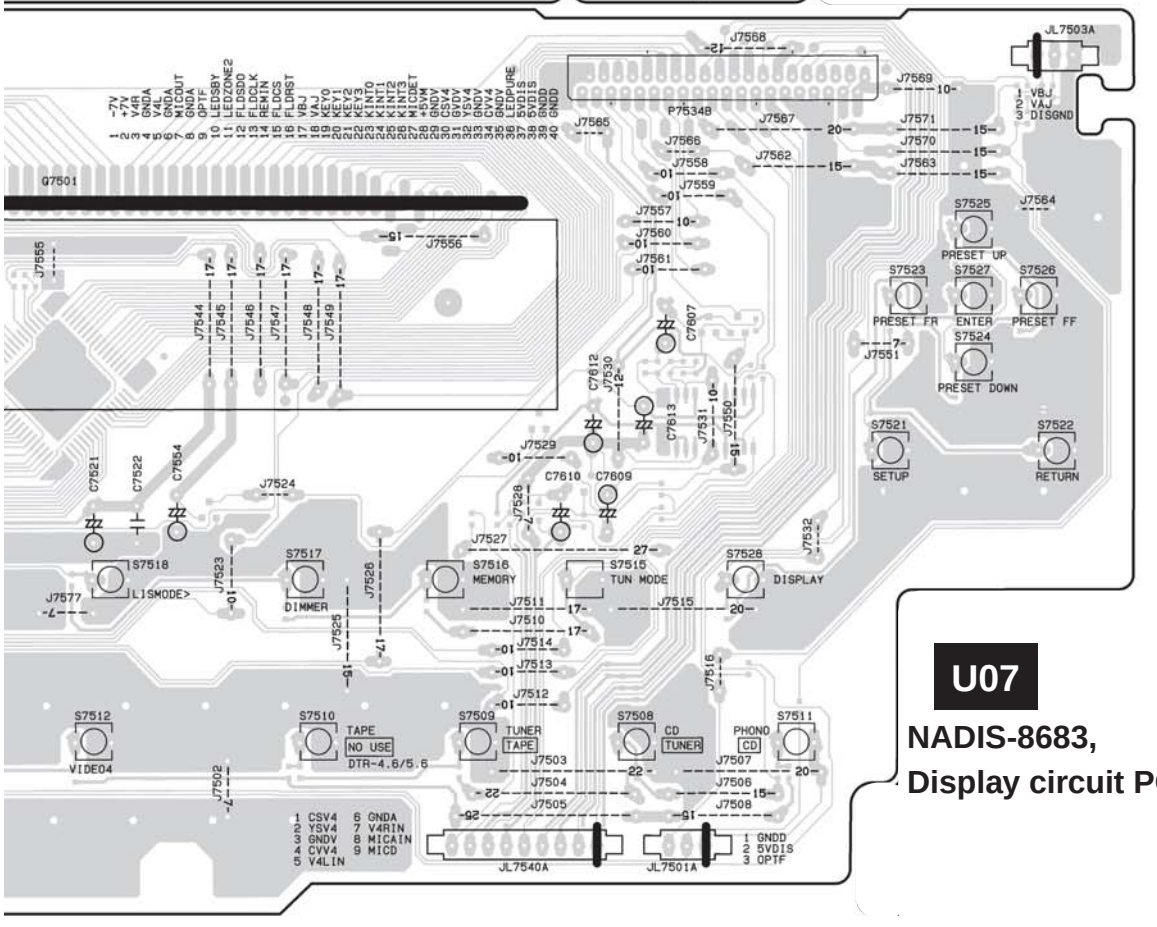

PRINTED CIRCUIT BOARD VIEW 3 DISPLAY SECTION

U073
NAETC-8685,
Headphone terminal
PC board

U075
NAETC-8687,
Volume PC board

U072
NAETC-8684,
Front video PC board

U07
NADIS-8683,
Display circuit
PC board

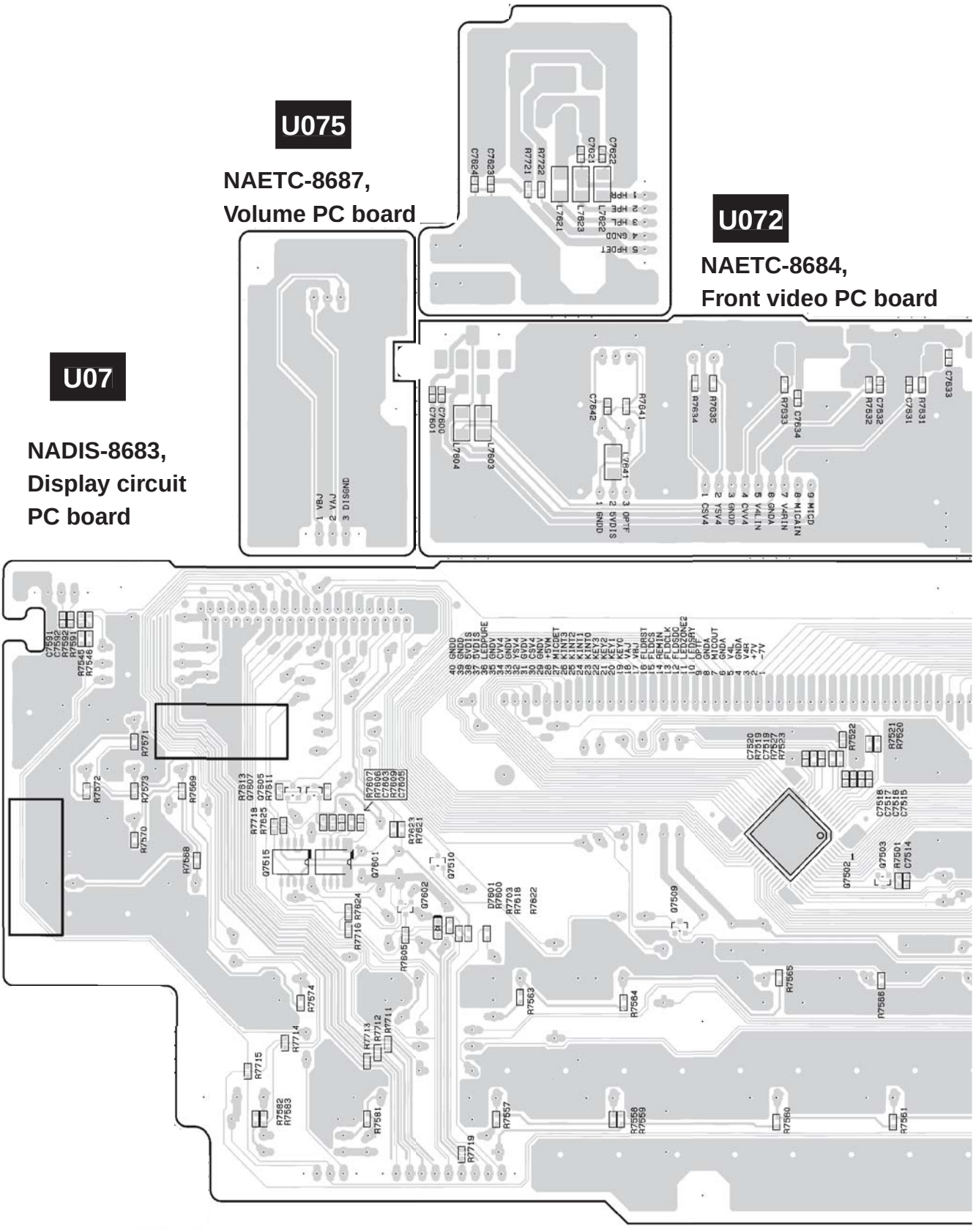

PRINTED CIRCUIT BOARD VIEW 3 DISPLAY SECTION

684,
eo PC board

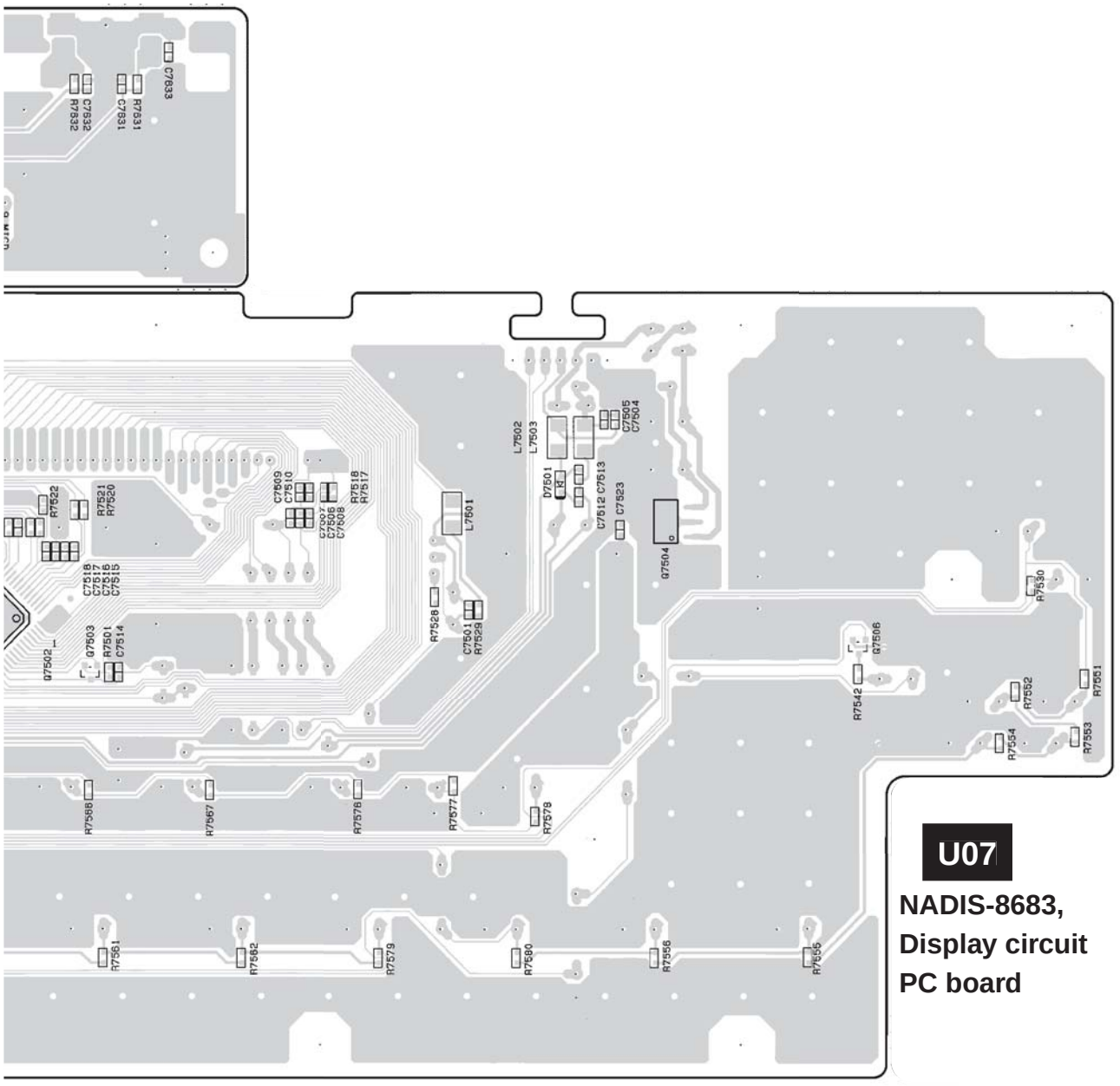

U07

NADIS-8683,
Display circuit
PC board

A B C D

1 2 3 4 5

PRINTED CIRCUIT BOARD VIEW 4 Power supply and Driver sections

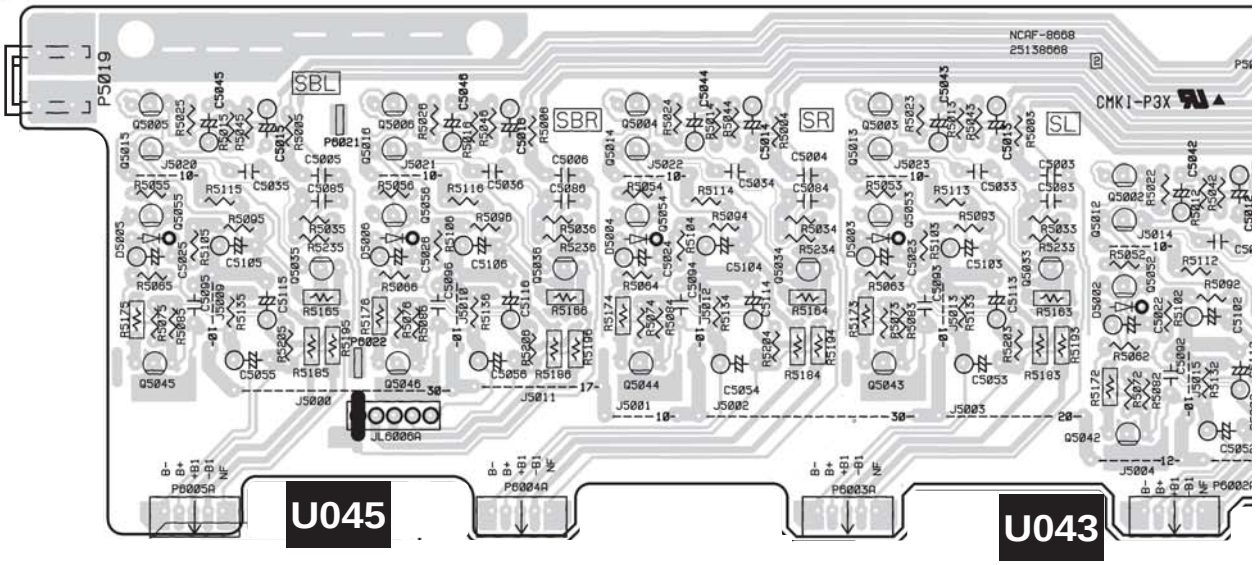

NAAF-8668, Driver circuit PC board

NAETC-8666, Spea

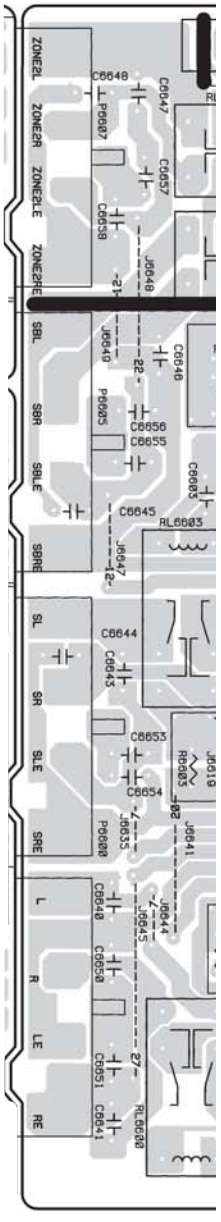

U04

NAPS-8664, Primary circuit PC board

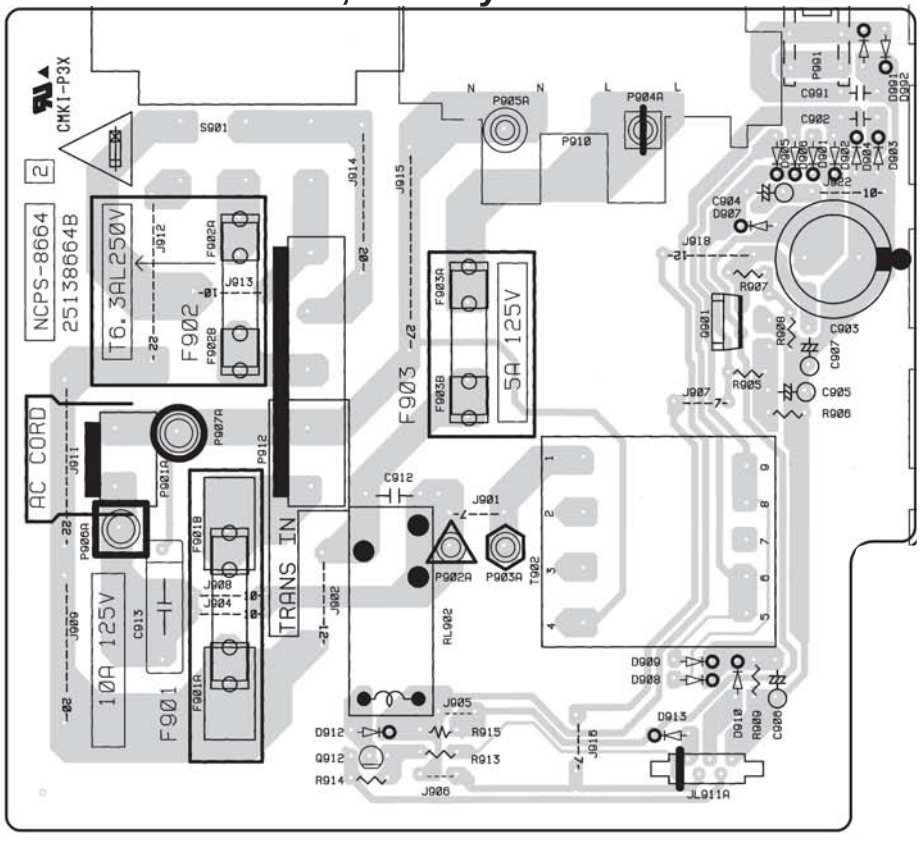

PRINTED CIRCUIT BOARD VIEW 4 Power supply and Driver sections

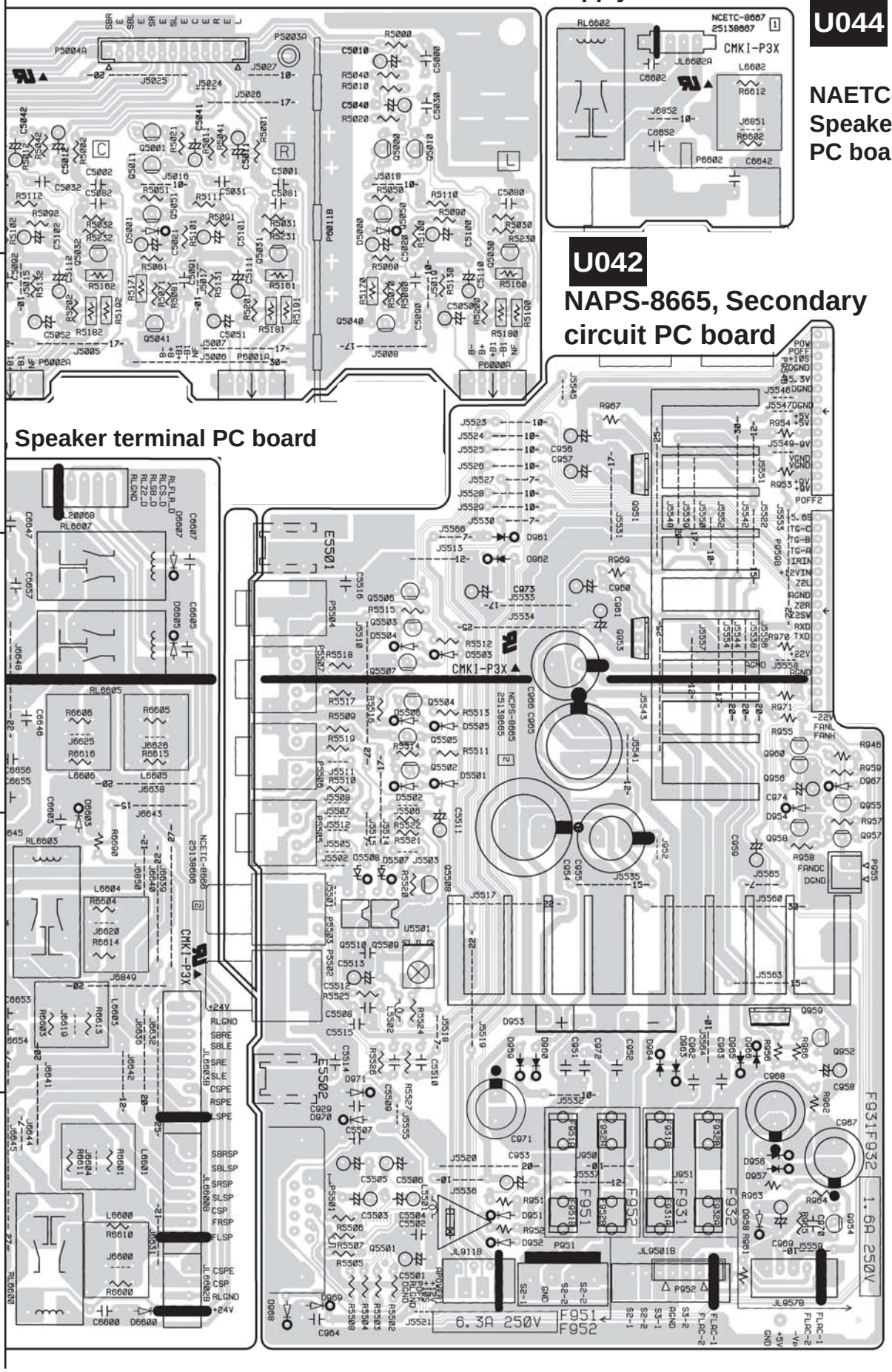

PRINTED CIRCUIT BOARD VIEW

DIGITAL AND MAIN MICRO-PROCESSOR PC BOARD

U032

NADG-8660, DSP circuit PC board

U03

NAAR-8661,Main micropocessor PC board

PRINTED CIRCUIT BOARD VIEW

DIGITAL AND MAIN MICRO-PROCESSOR PC BOARD

NAAR-8661,Main micropocessor PC board

U03

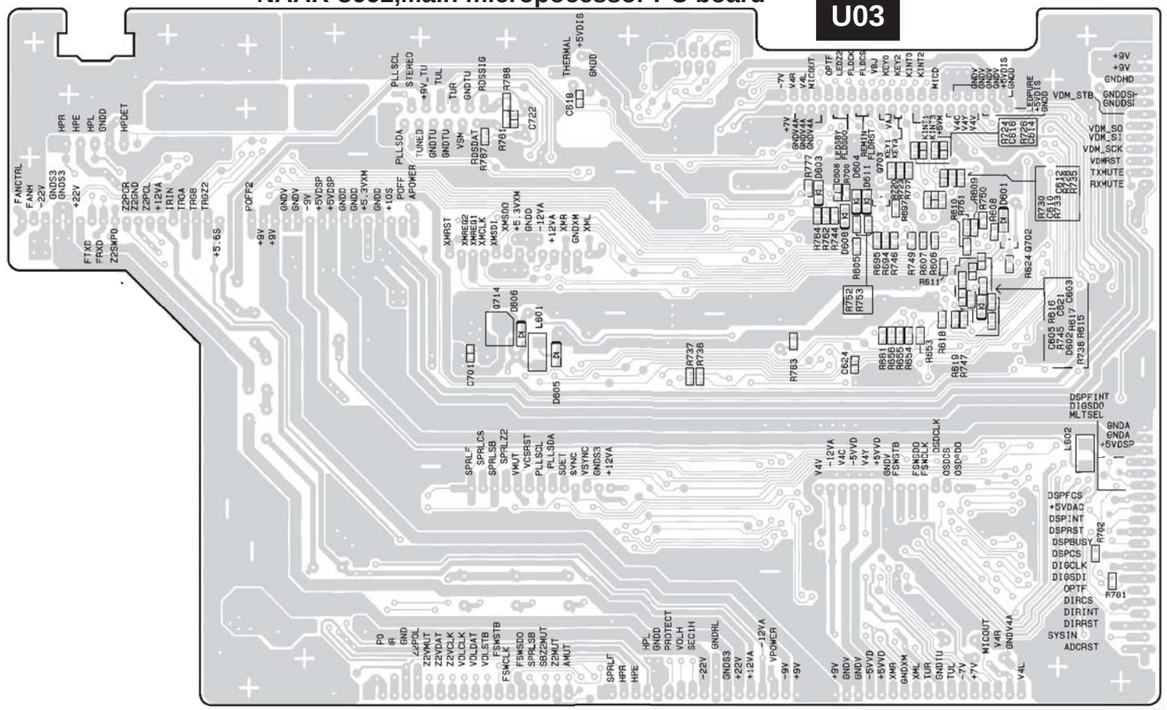

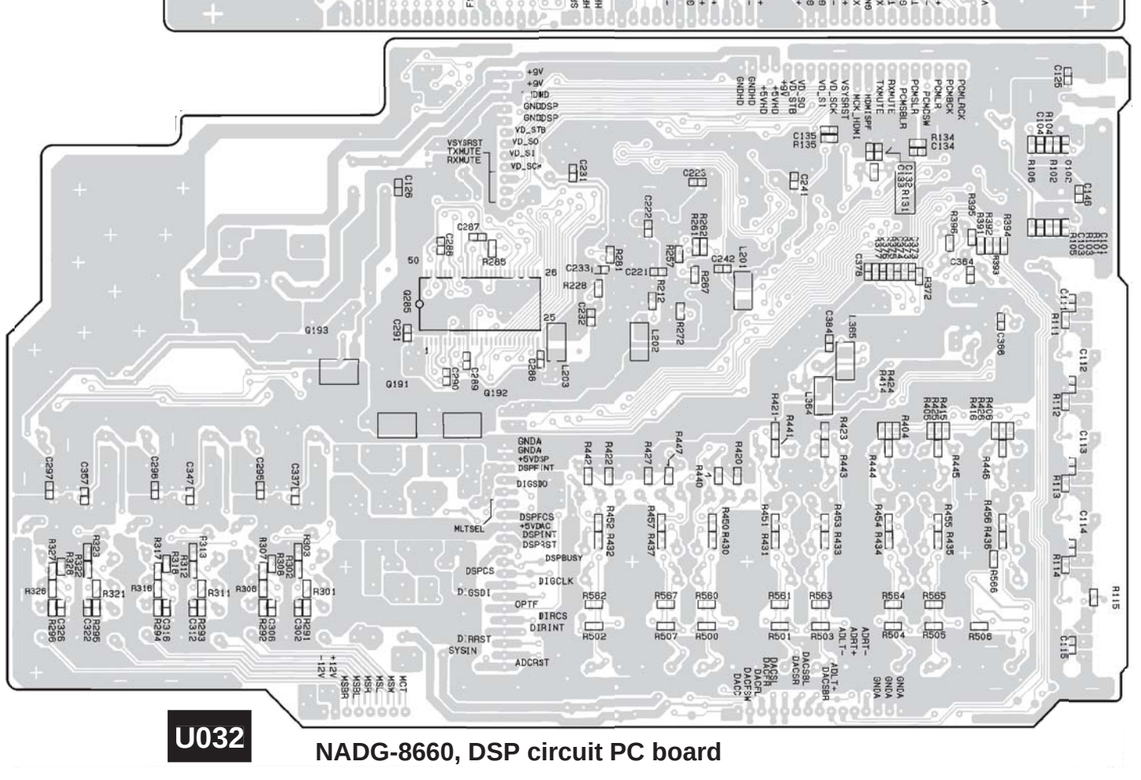

U032

NADG-8660, DSP circuit PC board

PRINTED CIRCUIT BOARD VIEW

POWER AMPLIFIER SECTION

NAAF-8678,Power amplifier PC board

U06

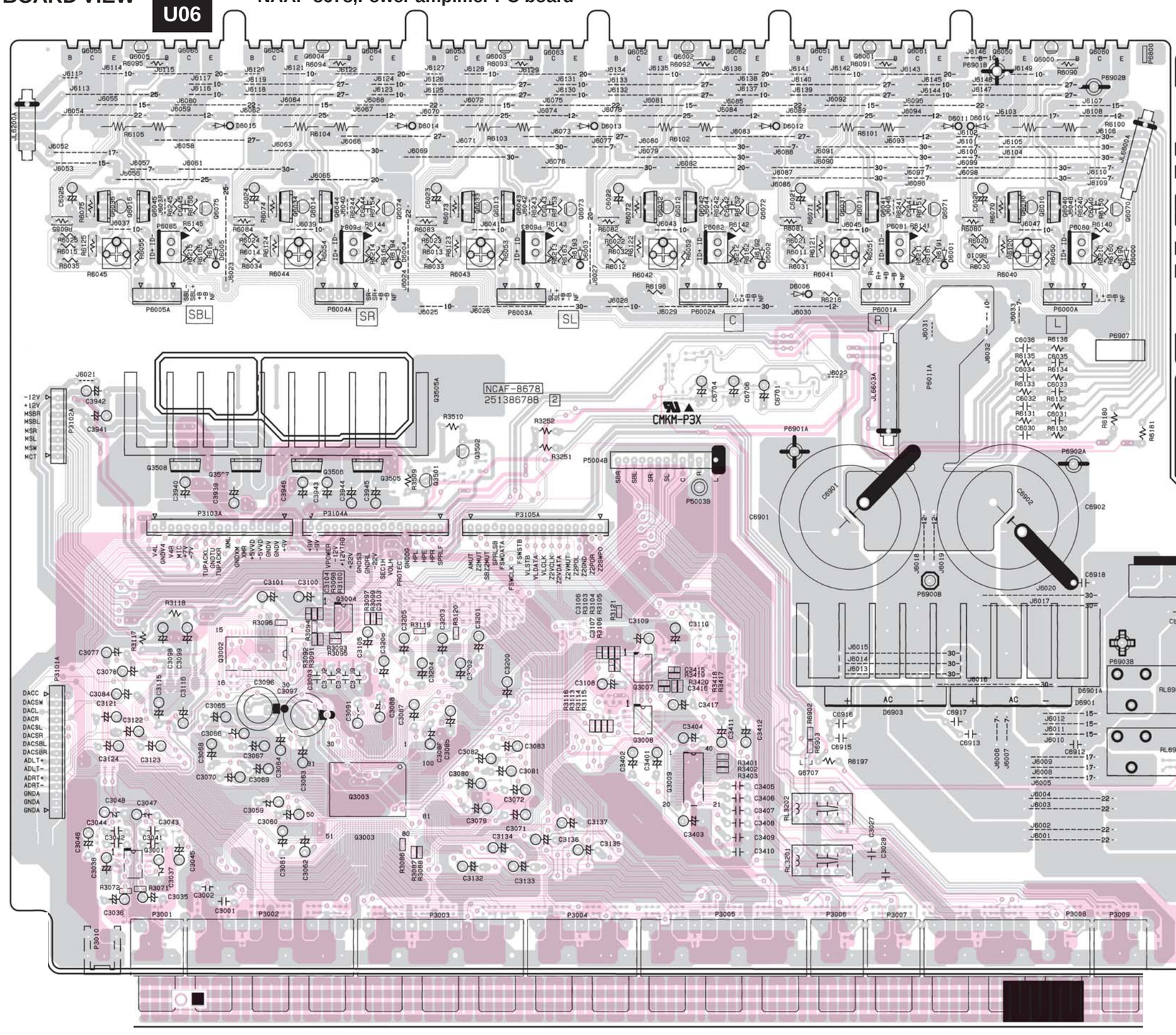

U064

NAAF-8682,
Surround back
amplifier PC board

U061

NAPS-8679,
Power transformer
terminal PC board

U062

NAETC-8680,
Thermal detector
PC board

A B C D E F G H

1 2 3 4 5

PRINTED CIRCUIT BOARD VIEW

AMPLIFIER SECTION

PC BOARD

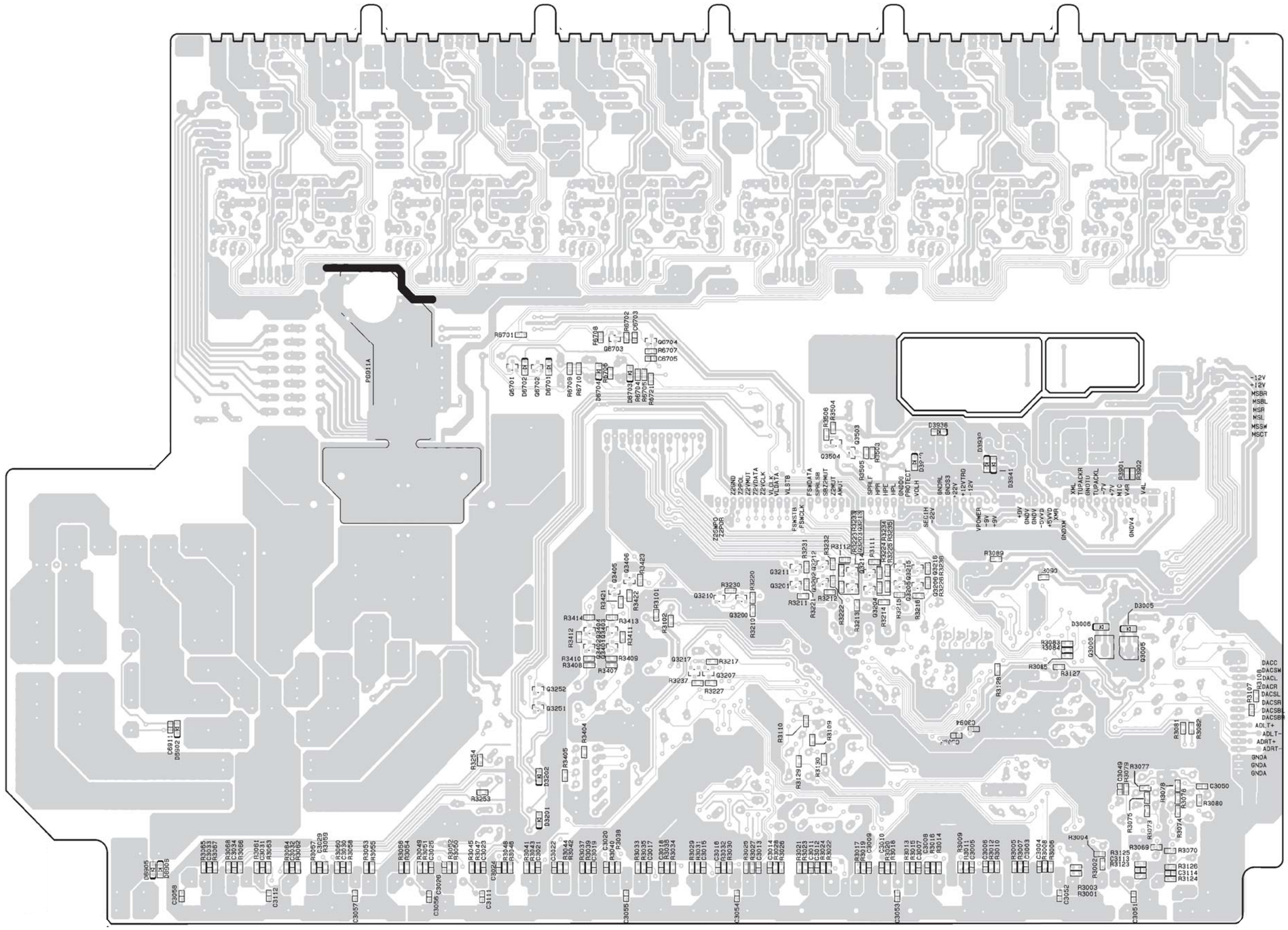

U06

NAAF-8678,Power amplifier PC board

PRINTED CIRCUIT BOARD VIEW

DISPLAY CIRCUIT PC BOARD

U073

NAETC-8685,
Headphone terminal
PC board

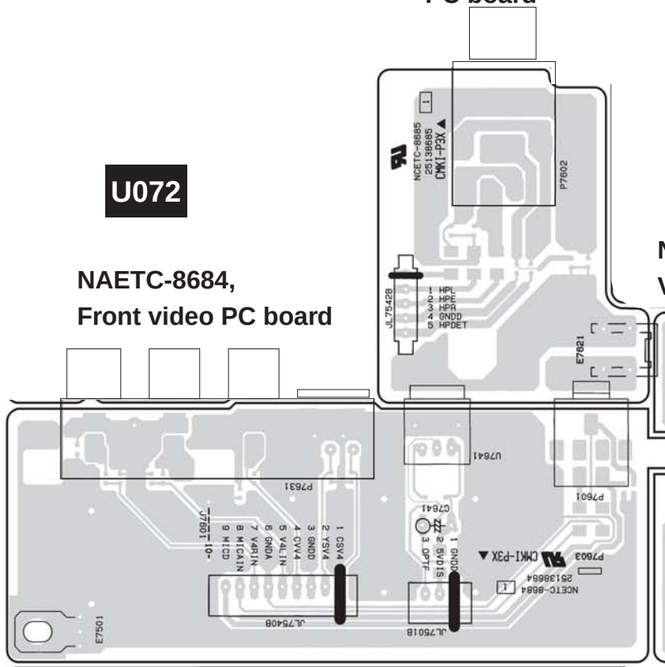

U072

NAETC-8684,
Front video PC board

U075

NAETC-8687,
Volume PC board

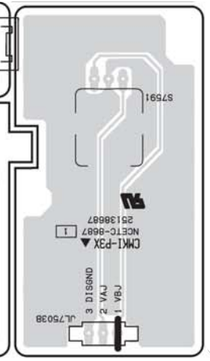

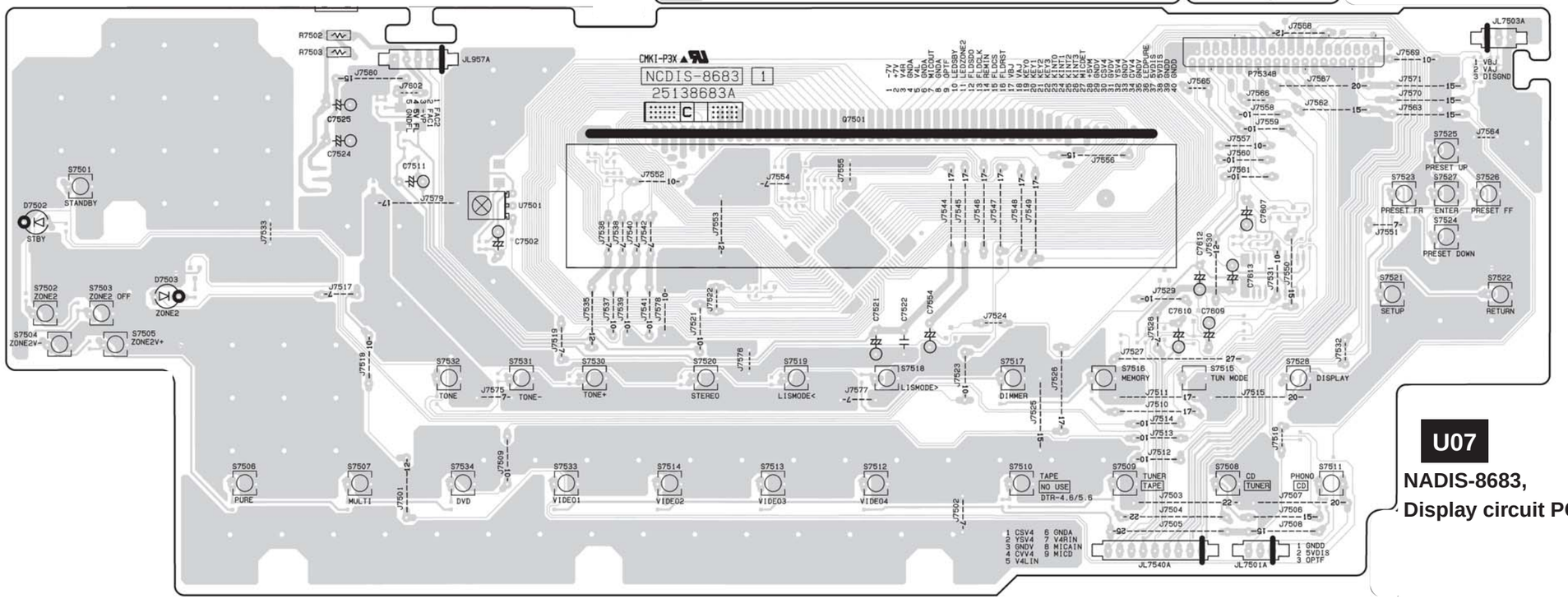

U07

NADIS-8683,
Display circuit PC board

PRINTED CIRCUIT BOARD VIEW

DISPLAY CIRCUIT PC BOARD

U073
NAETC-8685,
Headphone terminal
PC board

U075
NAETC-8687,
Volume PC board

U072
NAETC-8684,
Front video PC board

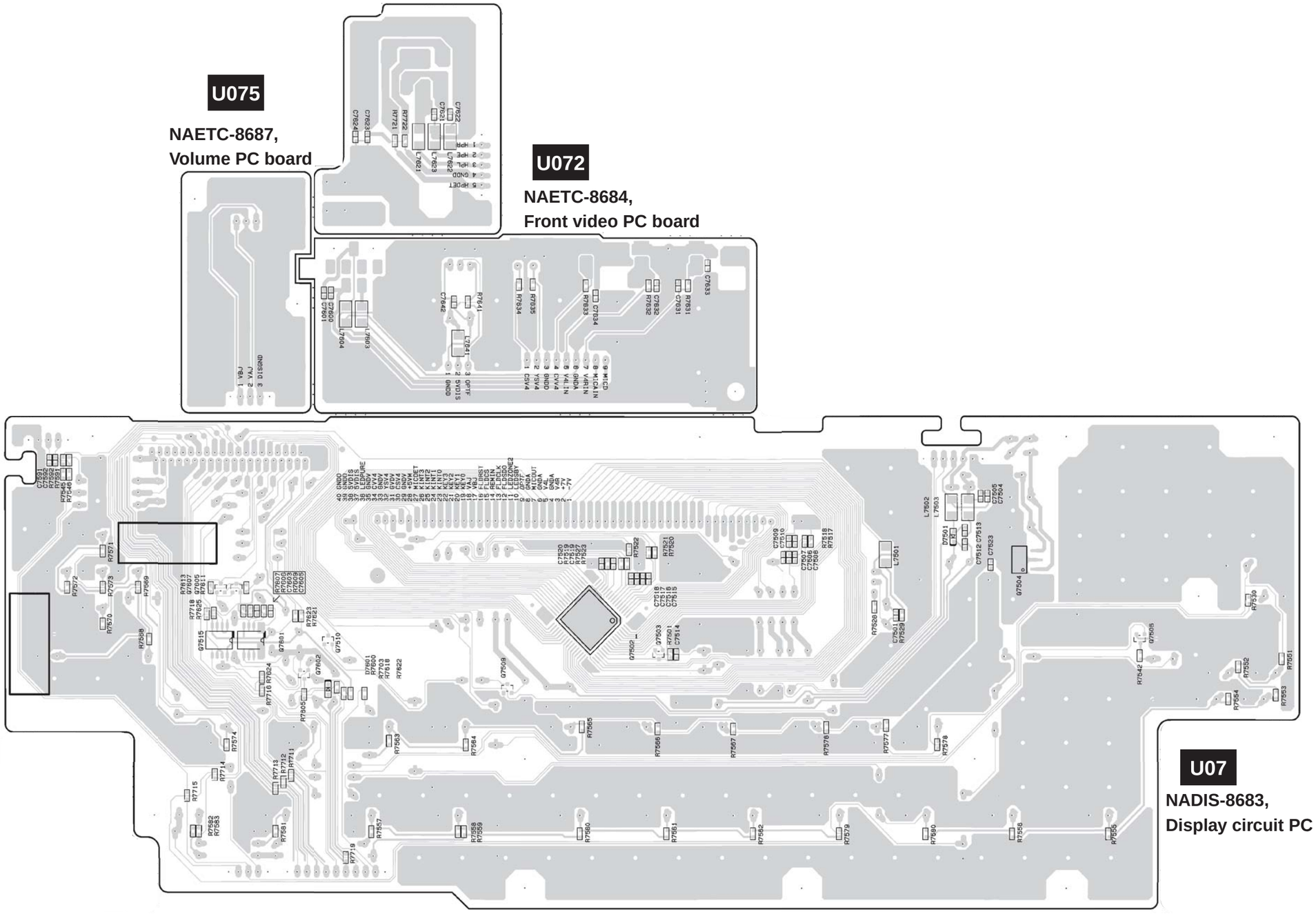

U07
NADIS-8683,
Display circuit PC board

PRINTED CIRCUIT BOARD VIEW

Power supply and Driver sections

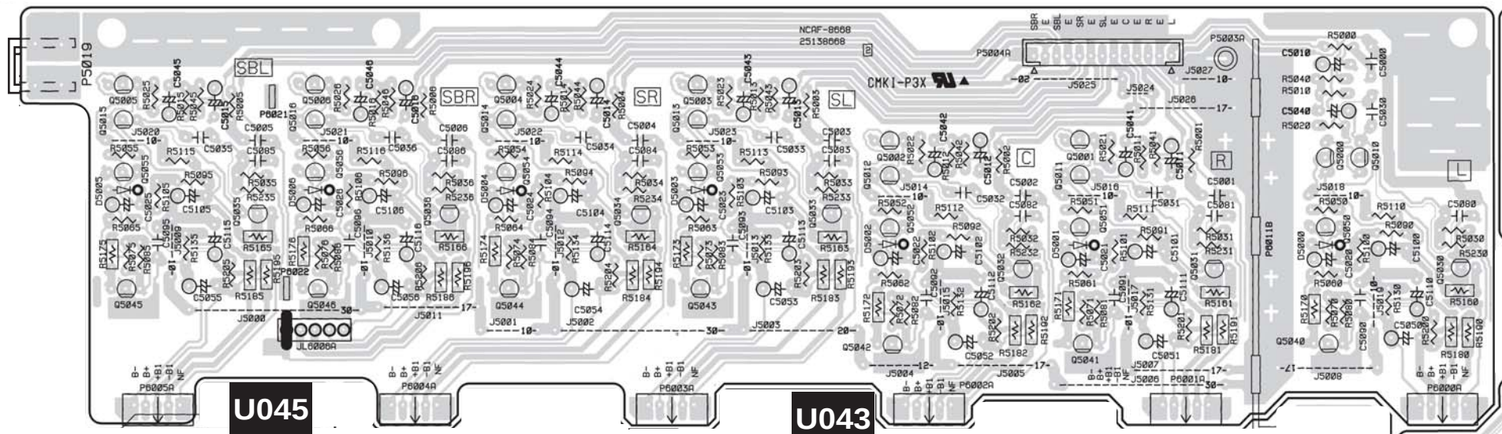

U045

NAAF-8668, Driver circuit PC board

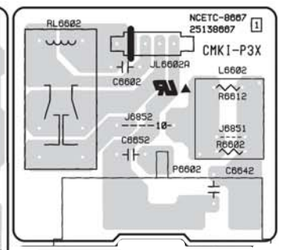

U044

NAETC-8667, Speaker terminal C PC board

U042

NAPS-8665, Secondary circuit PC board

U043

NAETC-8666, Speaker terminal PC board

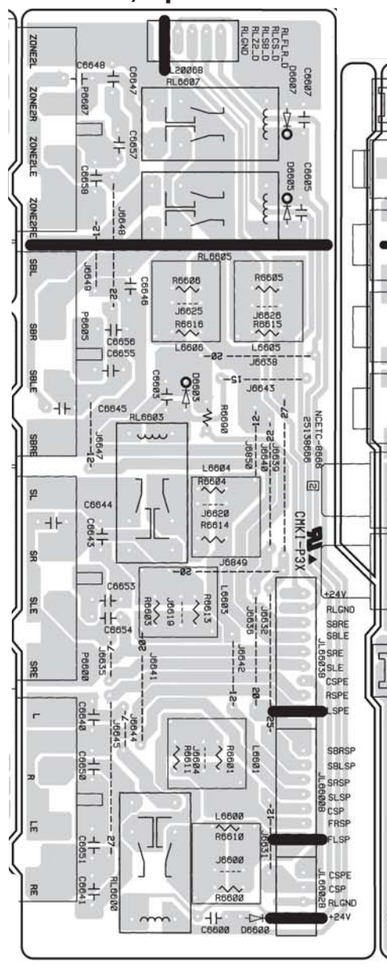

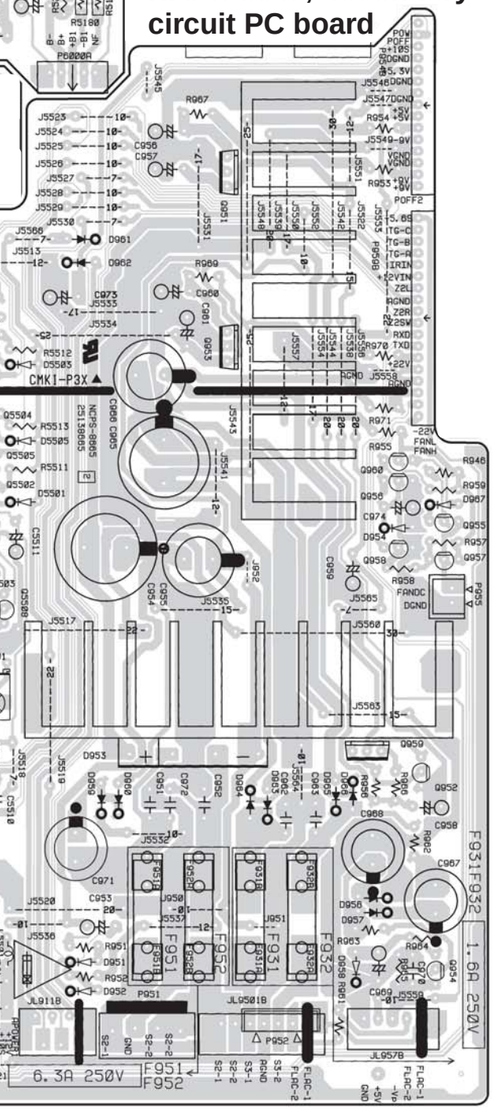

U04

NAPS-8664, Primary circuit PC board

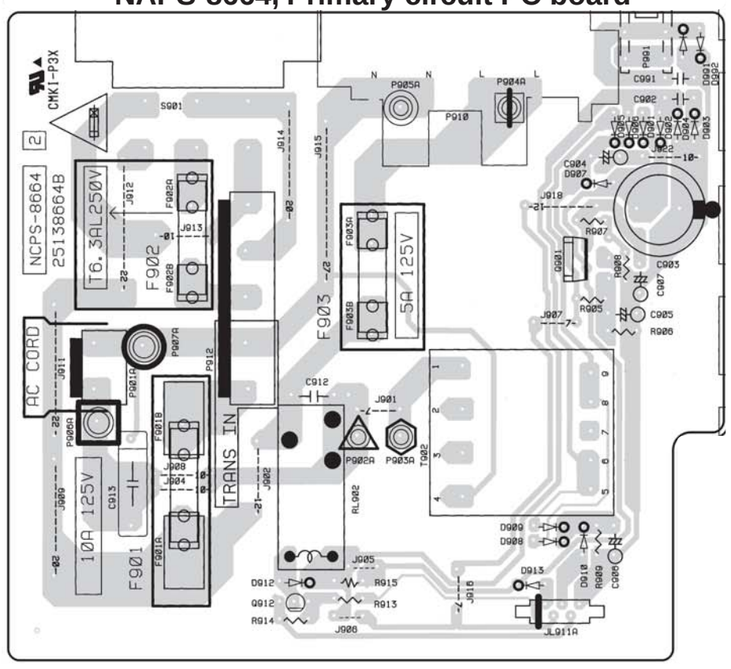

IC BLOCK DIAGRAMS AND DESCRIPTIONS

ADV7172 (Digital PAL/NTSC Video Encoder with Six DACs (10-Bits))

BLOCK DIAGRAM

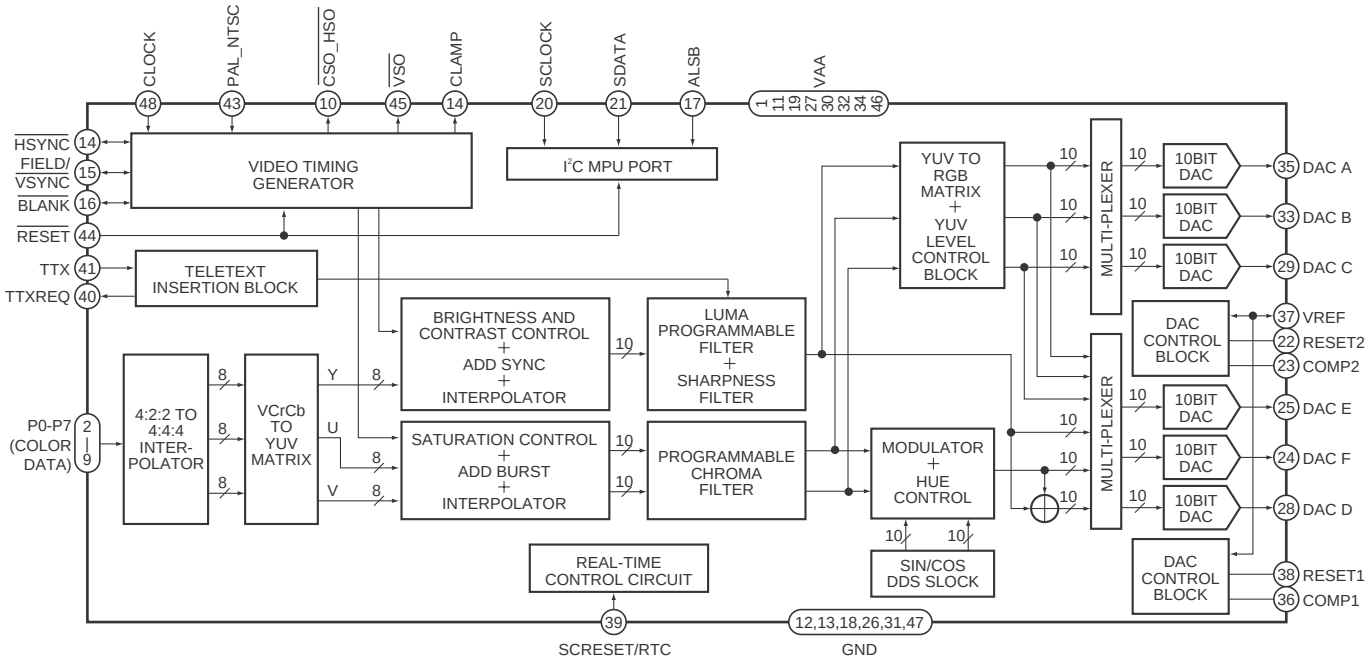

PIN LAYOUT

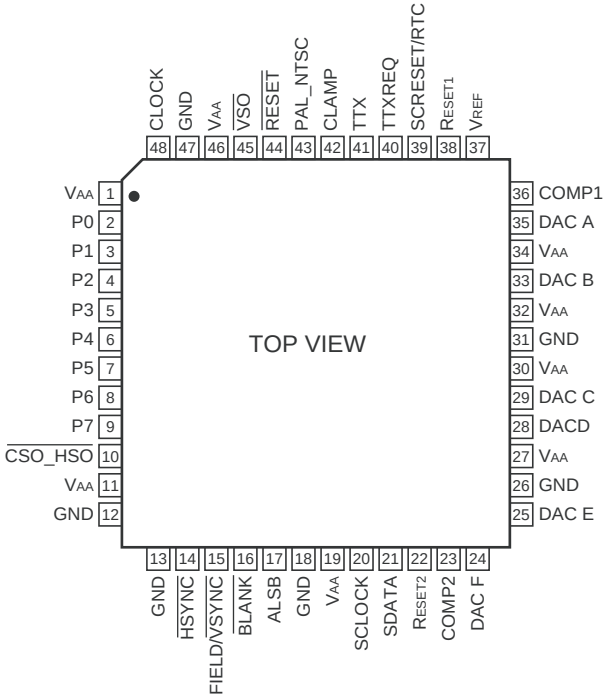

IC BLOCK DIAGRAMS AND DESCRIPTIONS

ADV7172 (Digital PAL/NTSC Video Encoder with Six DACs (10-Bits))

TERMINAL DESCRIPTION

No.	Name	I/O	Description
9-2	P7-P0	I	8-Bit 4:2:2 Multiplexed YCrCb Pixel Port (P7-P0) P0 represents the LSB.
48	CLOCK	I	TTL Clock Input. Requires a stable 27 MHz reference clock for standard operation. Alternatively, a 24.5454 MHz (NTSC) or 29.5 MHz (PAL) can be used for square pixel operation.
14	$\overline{\text{HSYNC}}$	I/O	$\overline{\text{HSYNC}}$ (Modes 1 and 2) Control Signal. This pin may be configured to output (Master Mode) or as an input and accept (Slave Mode) Sync signals.
15	FIELD/$\overline{\text{VSYNC}}$	I/O	Dual Function FIELD (Mode 1) and $\overline{\text{VSYNC}}$ (Mode 2) Control Signal. This pin may be configured to output (Master Mode) or as an input (Slave Mode) and accept these control signals.
16	$\overline{\text{BLANK}}$	I/O	Video Blanking Control Signal. The pixel inputs are ignored when this is Logic Level "0" This signal is optional.
39	SCRESET/RTC	I	This pin can be configured as an input by setting MR42 and MR41 of Mode Register 4. It can be configured as a subcarrier reset pin, in which case a low-to-high transition on this pin will reset the subcarrier phase to Field 0. Alternatively it may be configured as a Real-Time Control (RTC) Input.
37	V_{REF}	I/O	Voltage Reference Input for DACs or Voltage Reference Output (1.235 V).
38	R_{SET1}	I	A 150 ohms resistor connected from this pin to GND is used to control full-scale amplitudes the Video Signals from DACs A, B, and C (the "large" DACs).
22	R_{SET2}	I	A 600 ohms resistor connected from this pin to GND is used to control full-scale amplitudes the Video Signals from DACs D, E, and F (the "small" DACs).
36	COMP1	O	Compensation Pin for DACs A, B, and C. Connect a 0.1 uF Capacitor from COMP to V_{AA}. For Optimum Dynamic Performance in Low Power Mode, the value of the COMP1 capacitor can be lowered to as low as 2.2 nF.
23	COMP2	O	Compensation Pin for DACs D, E, and F. Connect a 0.1 uF Capacitor from COMP to V_{AA}.
35	DAC A	O	GREEN/Composite/Y Analog Output. This DAC is capable of providing 34.66 mA output.
33	DAC B	O	BLUE/S-Video Y/U Analog Output. This DAC is capable of providing 34.66 mA output.
29	DAC C	O	RED/S-Video C/V Analog Output. This DAC is capable of providing 34.66 mA output.
28	DAC D	O	GREEN/Composite/Y Analog Output. This DAC is capable of providing 8.66 mA output.
25	DAC E	O	BLUE/S-Video Y/U Analog Output. This DAC is capable of providing 8.66 mA output.
24	DAC F	O	RED/S-Video C/V Analog Output. This DAC is capable of providing 8.66 mA output.
20	SCLOCK	I	MPU Port Serial Interface Clock Input.
21	SDATA	I/O	MPU Port Serial Data Input/Output.
42	CLAMP	O	TTL Output Signal to external circuitry to enable clamping of all video signals.
43	PAL_NTSC	I	Input signal to select PAL or NTSC mode of operation, pin set to Logic "1" selects PAL.
45	$\overline{\text{VSO}}$	O	$\overline{\text{VSO}}$ TTL Output Sync Signal.
10	$\overline{\text{CSO\_HSO}}$	O	Dual Function $\overline{\text{CSO}}$ or $\overline{\text{HSO}}$ TTL Output Sync Signal.
17	ALSB	I	TTL Address Input. This signal sets up the LSB of the MPU address.
44	$\overline{\text{RESET}}$	I	The input resets the on-chip timing generator and sets the ADV7172/ADV7173 into default mode. This is NTSC operation, Timing Slave Mode 0, DACs A, B, and C powered OFF, DACs D, E, and F powered ON, Composite and S-Video out.
41	TTX	I	Teletext Data Input Pin.
40	TTXREQ	O	Teletext Data Request output signal used to control teletext data transfer.
1, 11, 19, 27, 30, 32, 34, 46	V_{AA}	P	Power Supply (3 V to 5 V).
12, 13, 18, 26, 31, 47	GND	G	Ground Pin.

IC BLOCK DIAGRAMS AND DESCRIPTIONS

ADV7183 (Advanced Video Decoder with 10-Bit ADC and Component Support)

BLOCK DIAGRAM

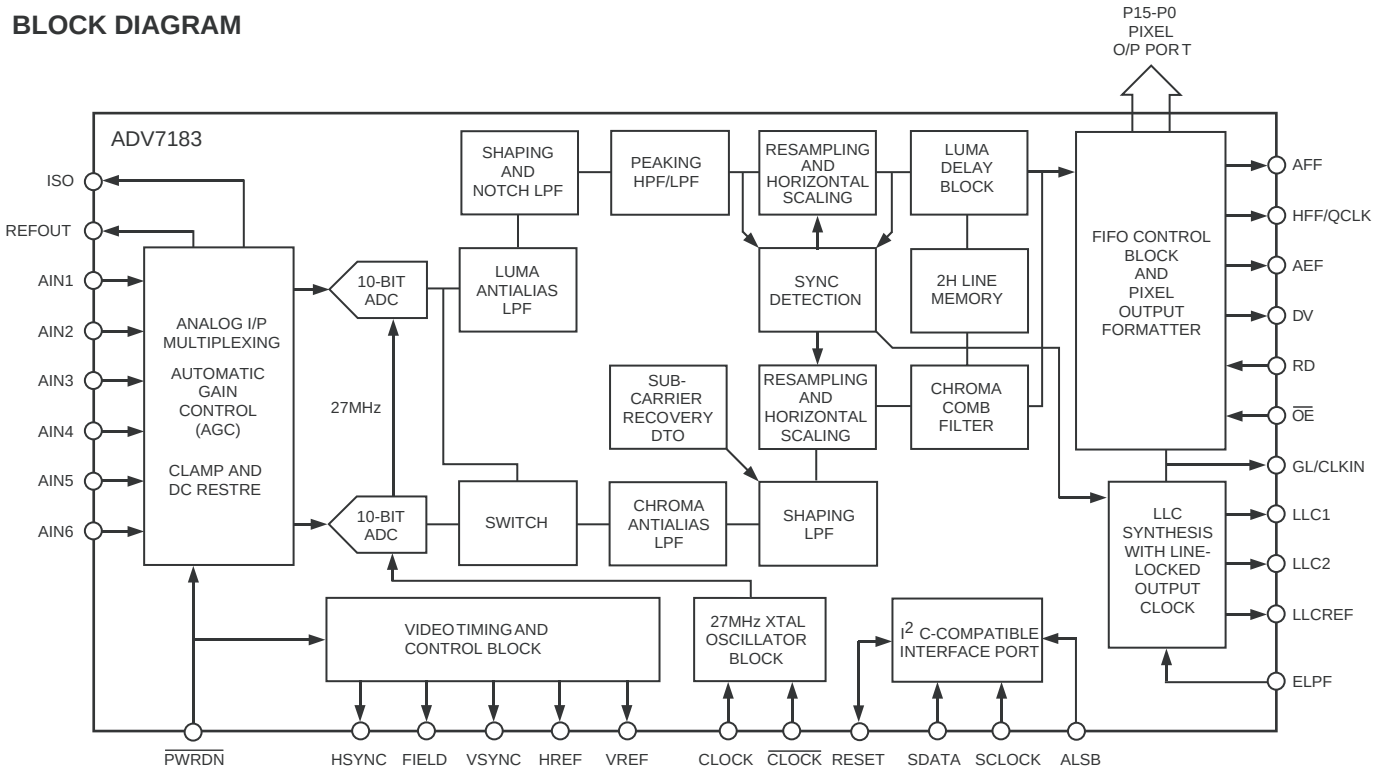

TERMINAL DESCRIPTION

Pin	Mnemonic	Input/Output	Function
1	VS/VACTIVE	O	VS or Vertical Sync. A dual-function pin, (OM_SEL[1:0] = 0, 0) is an output signal that indicates a vertical sync with respect to the YUV pixel data. The active period of this signal is six lines of video long. The polarity of the VS signal is controlled by the PVS bit. VACTIVE (OM_SEL[1:0] = 1, 0 or 0, 1) is an output signal that is active during the active/viewable period of a video field. The polarity of VACTIVE is controlled by PVS bit.
2	HS/HACTIVE	O	HS or Horizontal Sync. A dual-function pin, (OM_SEL[1:0] = 0, 0) is a programmable horizontal sync output signal. The rising and falling edges can be controlled by HSB[9:0] and HSE[9:0] in steps of 2 LLC1. The polarity of the HS signal is controlled by the PHS bit. HACTIVE (OM_SEL[1:0]= 1, 0 or 0, 1) is an output signal that is active during the active/viewable period of a video line. The active portion of a video line is programmable on the ADV7183. The polarity of HACTIVE is controlled by PHS bit.
3, 14	DVSSIO	G	Digital I/O Ground
4, 15	DVDDIO	P	Digital I/O Supply Voltage (3.3 V)
5-8, 19-24, 32, 33, 73-76	P15-P0	O	Video Pixel Output Port. 8-bit multiplexed YCrCb pixel port (P15-P8), 16-bit YCrCb pixel port (P15-P8 = Y and P7-P0 = Cb,Cr).
9, 31, 71	DVSS1-3	G	Ground for Digital Supply
10, 30, 72	DVDD1-3	P	Digital Supply Voltage (3.3 V)
11	AFF	O	Almost Full Flag. A FIFO control signal indicating when the FIFO has reached the almost full margin set by the user (use FFM[4:0]). The polarity of this signal is controlled by the PFF bit.
12	HFF/QCLK/GL	I/O	Half Full Flag. A multifunction pin, (OM_SEL[1:0] = 1, 0) is a FIFO control signal that indicates when the FIFO is half full. The QCLK (OM_SEL[1:0] = 0, 1) pin function is a qualified pixel output clock when using FIFO SCAPI mode. The GL (OM_SEL[1:0] = 0, 0) function (Genlock output) is a signal that contains a serial stream of data that contains information for locking the subcarrier frequency. The polarity of HFF signal is controlled by PFF bit.
13	AEF	O	Almost Empty Flag. A FIFO control signal, it indicates when the FIFO has reached the almost empty margin set by the user (use FFM[4:0]). The polarity of this signal is controlled by PFF bit.
16	CLKIN	I	Asynchronous FIFO Clock. This asynchronous clock is used to output data onto the P19-P0 bus and other control signals.
17, 18, 34, 35	GPO[3:0]	O	General-Purpose Outputs controlled via I^2C

IC BLOCK DIAGRAMS AND DESCRIPTIONS

ADV7183 (Advanced Video Decoder with 10-Bit ADC and Component Support)

TERMINAL DESCRIPTION

Pin	Mnemonic	Input/Output	Function
25	LLCREF	O	Clock Reference Output. This is a clock qualifier distributed by the internal CGC for a data rate of LLC2. The polarity of LLCREF is controlled by the PLLCREF bit.
26	LLC2	O	Line-Locked Clock System Output Clock/2 (13.5 MHz)
27	LLC1/PCLK	O	Line-Locked Clock System Output Clock. A dual-function pin (27 MHz ± 5%) or a FIFO output clock ranging from 20 MHz to 35 MHz.
28	XTAL1	O	Second terminal for crystal oscillator; not connected if external clock source is used.
29	XTAL	I	Input terminal for 27MHz crystal oscillator or connection for external oscillator with CMOS-compatible square wave clock signal
36	$\overline{\text{PWRDN}}$	I	Power-Down Enable. A logical low will place part in a power-down status.
37	ELPF	I	This pin is used for the External Loop Filter that is required for the LLC PLL.
38	PVDD	P	
39	PVSS	G	
40, 47, 53, 56, 63	AVSS	G	Ground for Analog Supply
41, 43, 45, 57, 59, 61	AVSS1-6	G	Analog Input Channels. Ground if single-ended mode is selected. These pins should be connected directly to REFOUT when differential mode is selected.
42, 44, 46, 58, 60, 62	AIN1-6	I	Video Analog Input Channels
48, 49	CAPY1-2	I	ADC Capacitor Network
50	AVDD	P	Analog Supply Voltage (5 V)
51	REFOUT	O	Internal Voltage Reference Output
52	CML	O	Common-Mode Level for ADC
54, 55	CAPC1-2	I	ADC Capacitor Network
64	$\overline{\text{RESET}}$	I/O	System Reset Input. Active Low.
65	ISO	I	Input Switch Over. A low to high transition on this input indicates to the decoder core that the input video source has been changed externally and configures the decoder to reacquire the new timing information of the new source. This is useful in applications where external video muxes are used. This input gives the advantage of faster locking to the external muxed video sources. A low to high transition triggers this input.
66	ALSB	I	TTL Address Input. Selects the MPU address: MPU address = 88h ALSB = 0, disables I^2C filter MPU address = 8Ah ALSB = 1, enables I^2C filter
67	SDATA	I/O	MPU Port Serial Data Input/Output
68	SCLK	I	MPU Port Serial Interface Clock Input
69	VREF/$\overline{\text{VRESET}}$	O	VREF or Vertical Reference Output Signal. Indicates start of next field. $\overline{\text{VRESET}}$ or Vertical Reset Output is a signal that indicates the beginning of a new field. In SCAPI/CAPI mode this signal is one clock wide and active low relative to CLKIN. It immediately follows the $\overline{\text{HRESET}}$ pixel, and indicates that the next active pixel is the first active pixel of the next field.
70	HREF/$\overline{\text{HRESET}}$	O	HREF or Horizontal Reference Output Signal. A dual-function pin (enabled when Line-Locked Interface is selected, OM_SEL[1:0] = 0,0), this signal is used to indicate data on the YUV output. The positive slope indicates the beginning of a new active line; HREF is always 720 Y samples long. $\overline{\text{HRESET}}$ or Horizontal Reset Output (enabled when SCAPI or CAPI is selected, OM_SEL[1:0] = 0, 1 or 1, 0) is a signal that indicates the beginning of a new line of video. In SCAPI/CAPI this signal is one clock cycle wide and is output relative to CLKIN. It immediately follows the last active pixel of a line. The polarity is controlled via PHVR.
77	RD	I	Asynchronous FIFO Read Enable Signal. A logical high on this pin enables a read from the output of the FIFO.
78	DV	O	DV or Data Valid Output Signal. In SCAPI/CAPI mode, DV performs to functions, depending on whether SCAPI or CAPI is selected. It toggles high when the FIFO has reached the AFF margin set by the user, and remains high until the FIFO is empty. The alternative mode is where it can be used to control FIFO reads for bursting information out of the FIFO. In API mode DV indicates valid data in the FIFO, which includes both pixel information and control codes. The polarity of this pin is controlled via PDV.
79	OE	I	Output Enable Controls Pixel Port Outputs. A logic high will three-state P19-P0.
80	FIELD	O	ODD/EVEN Field Output Signal. An active state indicates that an even field is being digitized. The polarity of this signal is controlled by the PF bit.

IC BLOCK DIAGRAMS AND DESCRIPTIONS(XM radio only)

TPS2012AD/MAX1930ESA(POWER-DISTRIBUTION)

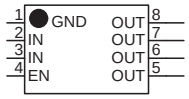

1	EN	Enable input. Logic low turns power switch on.
2,3	IN	Input voltage
4	GND	Ground
5~8	OUT	Power switch output

M30281FAHP(XM MICROPROCESSOR)

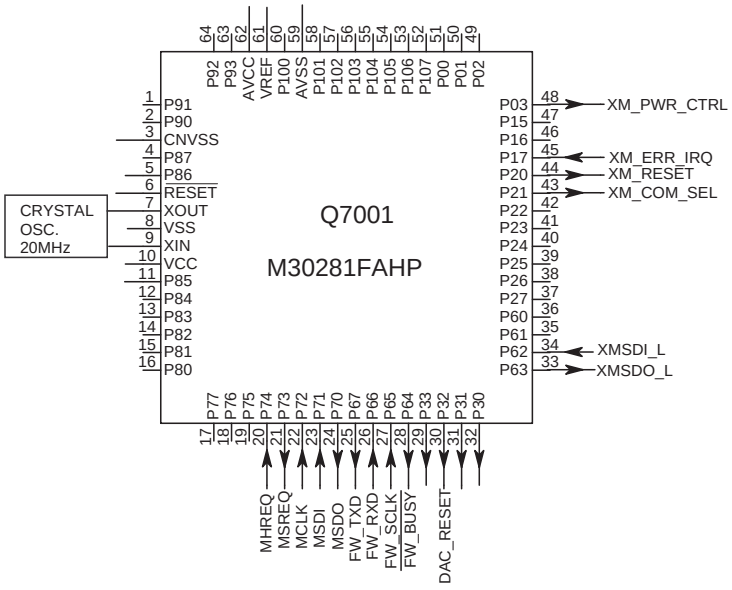

No.	PIN NAME	I/O	DESCRIPTION
3	Cnvss		Connect to Vcc.
5	FW_CE	I	Port for writing flash.
6	~RESET	I	Reset input
7	Xout		Connect to the crystal oscillator.
8	Vss		Ground for power supply
9	Xin		Connect to the crystal oscillator.
10	Vcc		Power supply Vcc
20	MHREQ	I	Request signal to transfer the serial data from main microprocessor. (System)
21	MSREQ	O	Request signal to transfer the serial data to main microprocessor. (Local)
22	MCLK	I	Serial clock input from main microprocessor.
23	MSDI	I	Serial data input from main microprocessor.
24	MSDO	O	Serial data output to main microprocessor.
25	FW_TXD	O	Port for writing flash.
26	FW_RXD	I	Port for writing flash.
27	FW_SCLK	I	Port for writing flash.
28	FW_BUSY	O	Port for writing flash.
29	DACSDO	O	Serial data output for DAC.
30	DACRESET	O	Reset output for DAC.
31	DACCS	O	Serial communication chip select for DAC.
32	DACCLK	O	Serial communication clock for DAC.
33	XMSDO	O	Serial data output for XM IC.
34	XMSDI	I	Serial data input for XM IC.
43	XM_COM_SEL	O	Command select output for XM IC.
44	XM_RESET	O	Reset output for XM IC.
45	XM_ERR_IRQ	I	Error interrupt request line for XM IC.
46	FW_P16	I	Port for writing flash.
48	XM_PWR_CTRL	O	Power supply control for XM IC.
59	AVSS		Ground for A/D converter.
61	Vref		Reference power supply for A/D converter.
62	AVcc		Power supply for A/D converter.

IC BLOCK DIAGRAMS AND DESCRIPTIONS

AK4384(106dB 192kHz 24-Bit 2ch ΔΣ DAC)

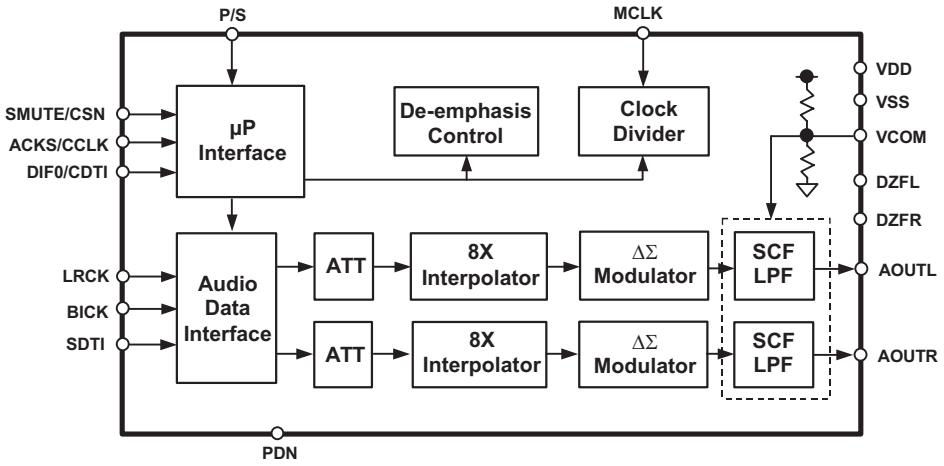

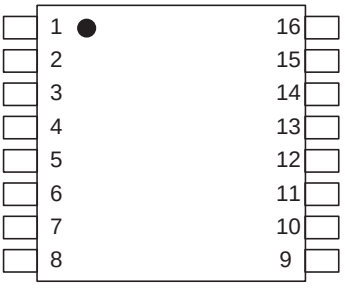

Pin Layout

No.	Pin Name	I/O	Function
1	MCLK	I	Master Clock Input Pin An external TTL clock should be input on this pin.
2	BICK	I	Audio Serial Data Clock Pin
3	SDTI	I	Audio Serial Data Input Pin
4	LRCK	I	L/R Clock Pin
5	PDN	I	Power-Down Mode Pin When at "L", the AK4384 is in the power-down mode and is held in reset. The AK4384 should always be reset upon power-up.
6	SMUTE	I	Soft Mute Pin in parallel mode "H": Enable, "L": Disable
	CSN	I	Chip Select Pin in serial mode
7	ACKS	I	Auto Setting Mode Pin in parallel mode "L": Manual Setting Mode, "H": Auto Setting Mode
	CCLK	I	Control Data Clock Pin in serial mode
8	DIF0	I	Audio Data Interface Format Pin in parallel mode
	CDTI	I	Control Data Input Pin in serial mode
9	P/S	I	Parallel/Serial Select Pin (Internal pull-up pin) "L": Serial control mode, "H": Parallel control mode
10	AOUTR	O	Rch Analog Output Pin
11	AOUTL	O	Lch Analog Output Pin
12	VCOM	O	Common Voltage Pin, VDD/2 Normally connected to VSS with a 0.1μF ceramic capacitor in parallel with a 10μF electrolytic cap.
13	VSS	-	Ground Pin
14	VDD	-	Power Supply Pin
15	DZFR	O	Rch Data Zero Input Detect Pin
16	DZFL	O	Lch Data Zero Input Detect Pin

Note: All input pins except pull-up pin should not be left floating.

IC BLOCK DIAGRAMS AND DESCRIPTIONS

BD3814FV(5.1ch Electronic Volume)

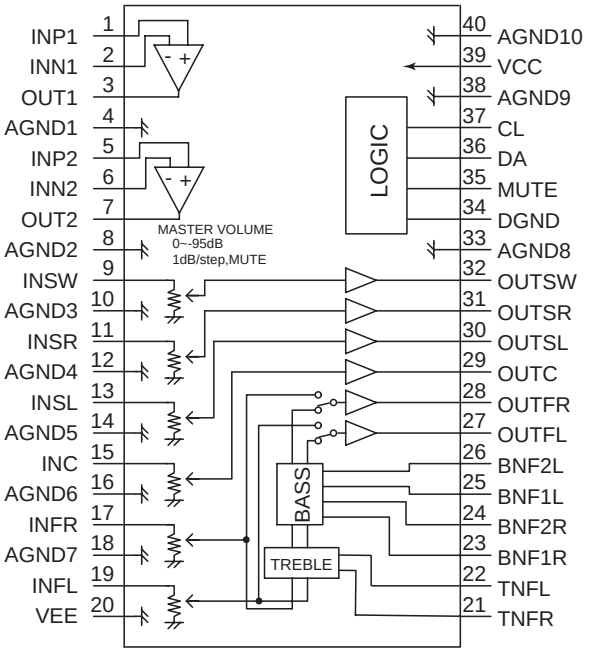

LM61C1Z(Temperature Sensor)

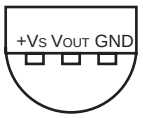

+Vs=+2.7 to +10V
VOUT=10mV x T℃+600mV
T:Temperature

No.	Terminal	Description	No.	Terminal	Description
1	INP1	Input terminal 1	21	TNFR	Rch treble filter terminal
2	INN1	Input terminal 1	22	TNFL	Lch treble filter terminal
3	OUT1	Output terminal 1	23	BNF1R	Rch bass filter terminal 1
4	AGND1	Analog ground terminal 1	24	BNF2R	Rch bass filter terminal 2
5	INP2	Input terminal 2	25	BNF1L	Lch bass filter terminal 1
6	INN2	Input terminal 2	26	BNF2L	Lch bass filter terminal 2
7	OUT2	Output terminal 2	27	OUTFL	Front Lch output terminal
8	AGND2	Analog ground terminal 2	28	OUTFR	Front Rch output terminal
9	INSW	Subwoofer input terminal	29	OUTC	Center ch output terminal
10	AGND3	Analog ground terminal 3	30	OUTSL	Surround Lch output terminal
11	INSR	Surrond Rch input terminal	31	OUTSR	Surround Rch output terminal
12	AGND4	Analog ground terminal 4	32	OUTSW	Subwoofer output terminal
13	INSL	Surround Lch input terminal	33	AGND8	Analog ground terminal 8
14	AGND5	Analog ground terminal 5	34	DGND	Digital ground terminal
15	INC	Center channel input terminal	35	MUTE	Mute temrinal
16	AGND6	Analog ground terminal 6	36	DA	Serial data and latch input terminal
17	INFR	Front Rch input terminal	37	CL	Serial clock input terminal
18	AGND7	Analog ground terminal 7	38	AGND9	Analog ground terminal 9
19	INFL	Front Lch input terminal	39	VCC	Power supply trerminal +
20	VEE	Power supply terminal -	40	AGND10	Analog ground terminal 10

IC BLOCK DIAGRAMS AND DESCRIPTIONS

CS42528 (8-Ch Codec with S/PDIF Receiver)

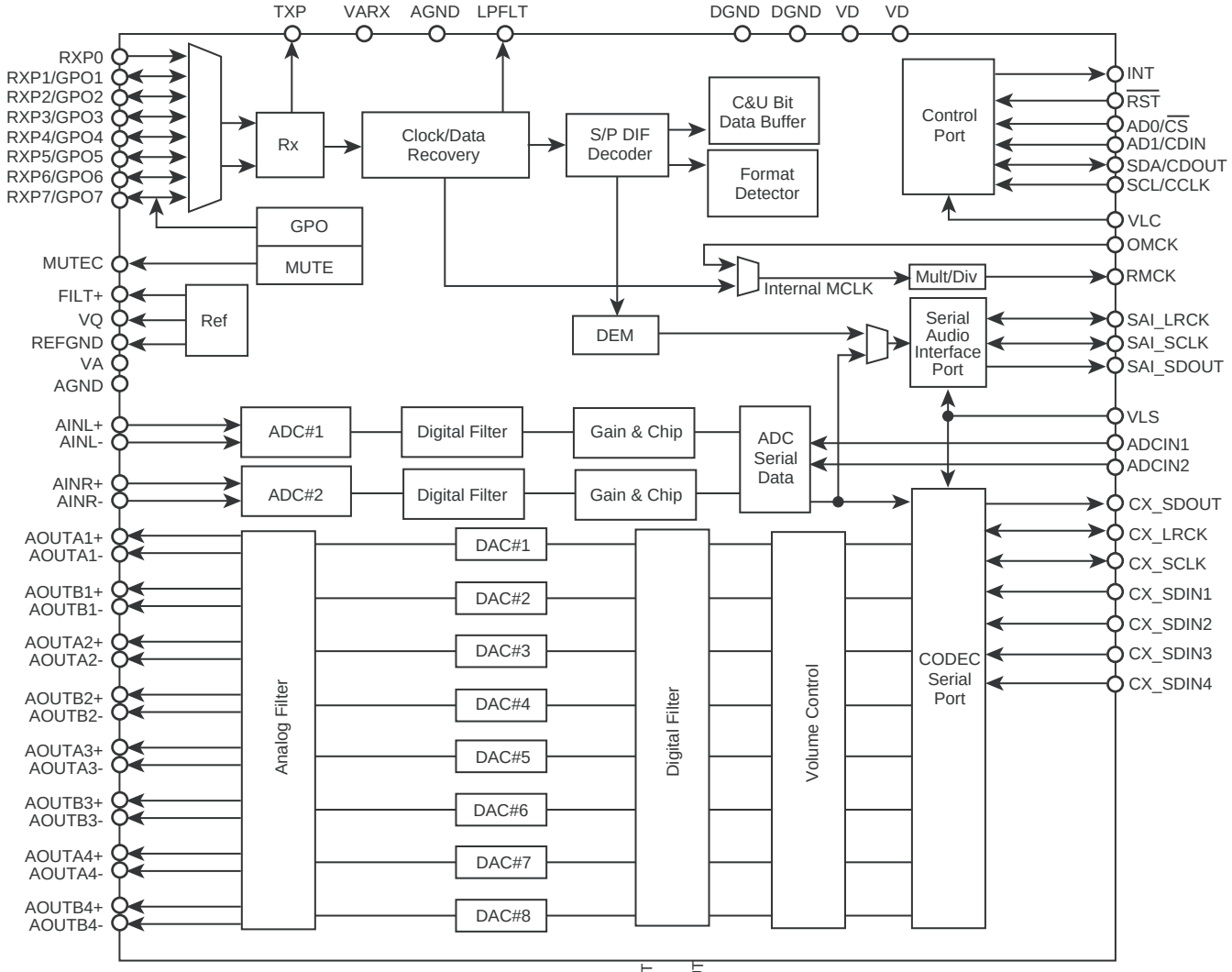

BLOCK DIAGRAM

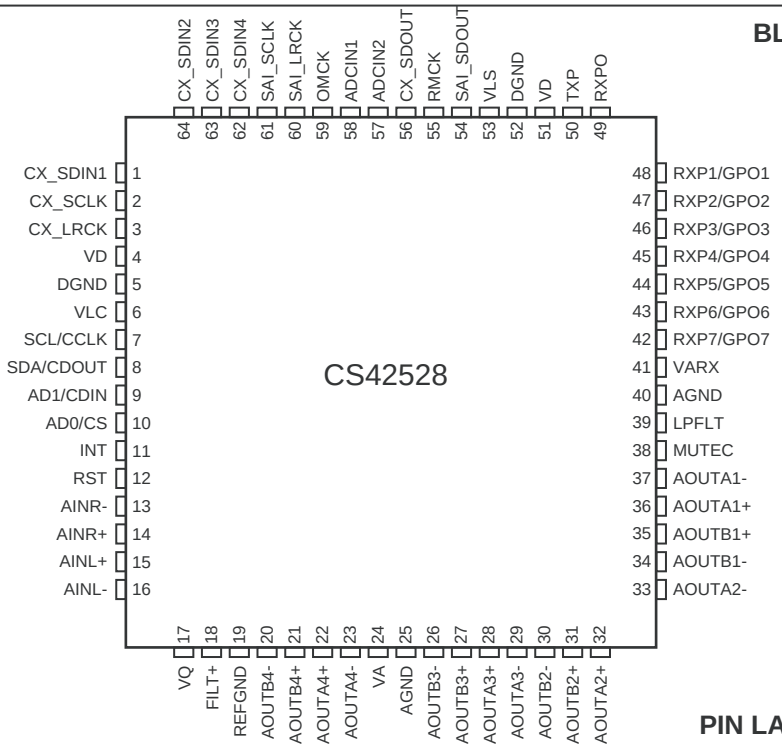

PIN LAYOUT

IC BLOCK DIAGRAMS AND DESCRIPTIONS

CS42528 (8-Ch Codec with S/PDIF Receiver)

TERMINAL DESCRIPTION

Pin Name	#	Pin Description
CX_SDIN1 CX_SDIN2 CX_SDIN3 CX_SDIN4	1 64 63 62	Codec Serial Audio Data Input (Input) - Input for two's complement serial audio data.
CX_SCLK	2	CODEC Serial Clock (Input/Output) - Serial clock for the CODEC serial audio interface
CX_LRCK	3	CODEC Left Right Clock (Input/ Output) - Determines which channel, Left or Right, is currently active on the CODEC serial audio data line.
VD	4 51	Digital Power (Input) - Positive power supply for the digital section.
DGND	5 52	Digital Ground (Input) - Ground reference. Connects to digital ground.
VLC	6	Control Port Power (Input) - Determines the required signal level for the control port.
SCL/CCLK	7	Serial Control Port Clock (Input) - Serial clock for the serial control port.
SDA/CDOUT	8	Serial Control Data (Input/Output) - SDA is a data I/O line in IC mode and requires an external pull-up resistor to the logic interface voltage. CDOUT is the output data line for the control port interface in SPI mode.
AD1/CDIN	9	Address Bit 1 (I^2C)/Serial Control Data (SPI) (Input) - AD1 a chip address pin in I^2C mode; CDIN is the input data line for control port interface in SPI mode.
AD0/$\overline{CS}$	10	Address Bit 0 (I^2C)/Control Port Chip Select (SPI) (Input) - AD0 is a chip address pin in I^2C mode; CS is the chip select signal in SPI mode.
INT	11	Interrupt (Output) - The CS42528 will generate an interrupt condition as per the Interrupt Mask register.
$\overline{RST}$	12	Reset (Input) - The device enters a low power mode and all internal registers are reset to their default settings when low.
AINR- AINR+	13 14	Differential right Channel Analog Input (Input) - Signals are presented differentially to the delta-sigma modulators via the AINR+/- pins.
AINL- AINL+	15 16	Differential right Channel Analog Input (Input) - Signals are presented differentially to the delta-sigma modulators via the AINR+/- pins.
VQ	17	Quiescent Voltage (Output) - Filter connection for internal quiescent reference voltage.
FILT+	18	Positive Voltage Reference (Output) - Positive reference voltage for the internal sampling circuits.
REFGND	19	Reference Ground (Input) - Ground reference for the internal sampling circuits.
AOUTA1 +, - AOUTB1 +, - AOUTA2 +, - AOUTB2 +, - AOUTA3 +, - AOUTB3 +, - AOUTA4 +, - AOUTB4 +, -	36, 37 35, 34 32, 33 31, 30 28, 29 27, 26 22, 23 21, 20	Differential Analog Output (Output) - The full-scale differential analog output level is specified in the Analog Characteristics specification table.
VA VARX	24 41	Analog Power (Input) - Positive power supply for the analog section.
AGND	25 40	Analog Ground (Input) - Ground reference. Connectes to analog ground.

IC BLOCK DIAGRAMS AND DESCRIPTIONS

CS42528 (8-Ch Codec with S/PDIF Receiver)

TERMINAL DESCRIPTION

Pin Name	#	Pin Description
VA VARX	24 41	Analog Power (Input) - Positive power supply for the analog section.
AGND	25 40	Analog Ground (Input) - Ground reference. Connects to analog ground.
MUTEC	38	Mute Control (Output) - The Mute Control pin outputs high impedance following an initial power -on condition or whenever the PDN bit is set to a "1", forcing the codec into power -down mode. The signal will remain in a high impedance state as long as the part is in power-down mode. The Mute Control pin goes to the selected "active" state during reset, muting, or if the master clock to left/right clock frequency ratio is incorrect. This pin is intended to be used as a control for external mute circuits to prevent the clicks and pops that can occur in any single supply system. The use of external mute circuits are not mandatoy but may be desired for designs requiring the absolute minimum in extraneous clicks and pops.
LPFLT	39	PLL Loop Filer (Output) - An RC network should be connected between this pin and ground.
RXP7/GPO7 RXP6/GPO6 RXP5/GPO5 RXP4/GPO4 RXP3/GPO3 RXP2/GPO2 RXP1/GPO1	42 43 44 45 46 47 48	S/PDIF Receiver Input/ General Purpose Output (Input/ Output) - Receiver inputs for S/PDIF encoded data. The CS42528 has an internal 8:2 multiplexer to select the active receiver port, according to the Receiver Mode Control 2 resister. These pins can also be configured as general purpose output pins, ADC Overflow indicators or Mute Control outputs according to the RXP/General Purpose Pin Control resisters.
RXP0	49	S/PDIF Receiver Input (Input) - Dedicated receiver input for S/PDIF encoded data.
TXP	50	S/PDIF Transmitter Output (Output) - S/PDIF encoded data output, mapped directly from one of the receiver inputs as indicated by the Receiver Mode Control 2 resister.
VLP	53	Serial Port Interface Power (Input) - Determines the required signal level for the serial port interfaces.
SAI_SDOUT	54	Serial Audio Interface Serial Data Output (Output) - Output for two's complement serial audio PCM data from the S/PDIF incoming stream. This pin can also be configured to transmit the output of the internal and external ADCs.
RMCK	55	Recovered Master Clock (Output) - Recovered master clock output from the External Clock Reference
CX_SDOUT	56	CODEC Serial Data Output (Output) - Output for two's complement serial audio data the internal and external ADCs.
ADCIN1 ADCIN2	58 57	External ADC Serial Input (Input) - The CS42528 provides for up two external stereo analog to digital converter inputs to provide a maximum of six channels on serial data output line when the CS42528 is placed in One Line mode.
OMCK	59	External Reference Clock (Input) - External clock reference that must be within the ranges specified in currently active on the serial audio data line.
SAI_LRCK	60	Serial Audio Interface Left/Right Clock (Input/Output) - Determines which channel, Left of Right, is currently active on the serial audio data line.
SAI_SCLK	61	Serial Audio Interface Serial Clock (Input/Output) - Serial clock for the Serial Audio Interface

IC BLOCK DIAGRAMS AND DESCRIPTIONS

CS494003(Audio Decoder DSP)

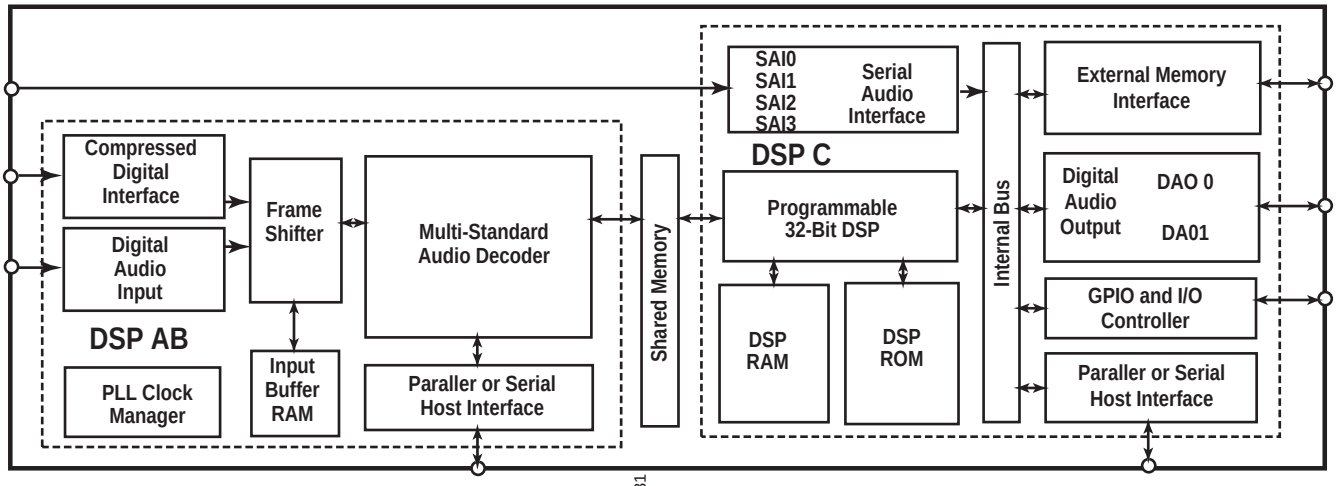

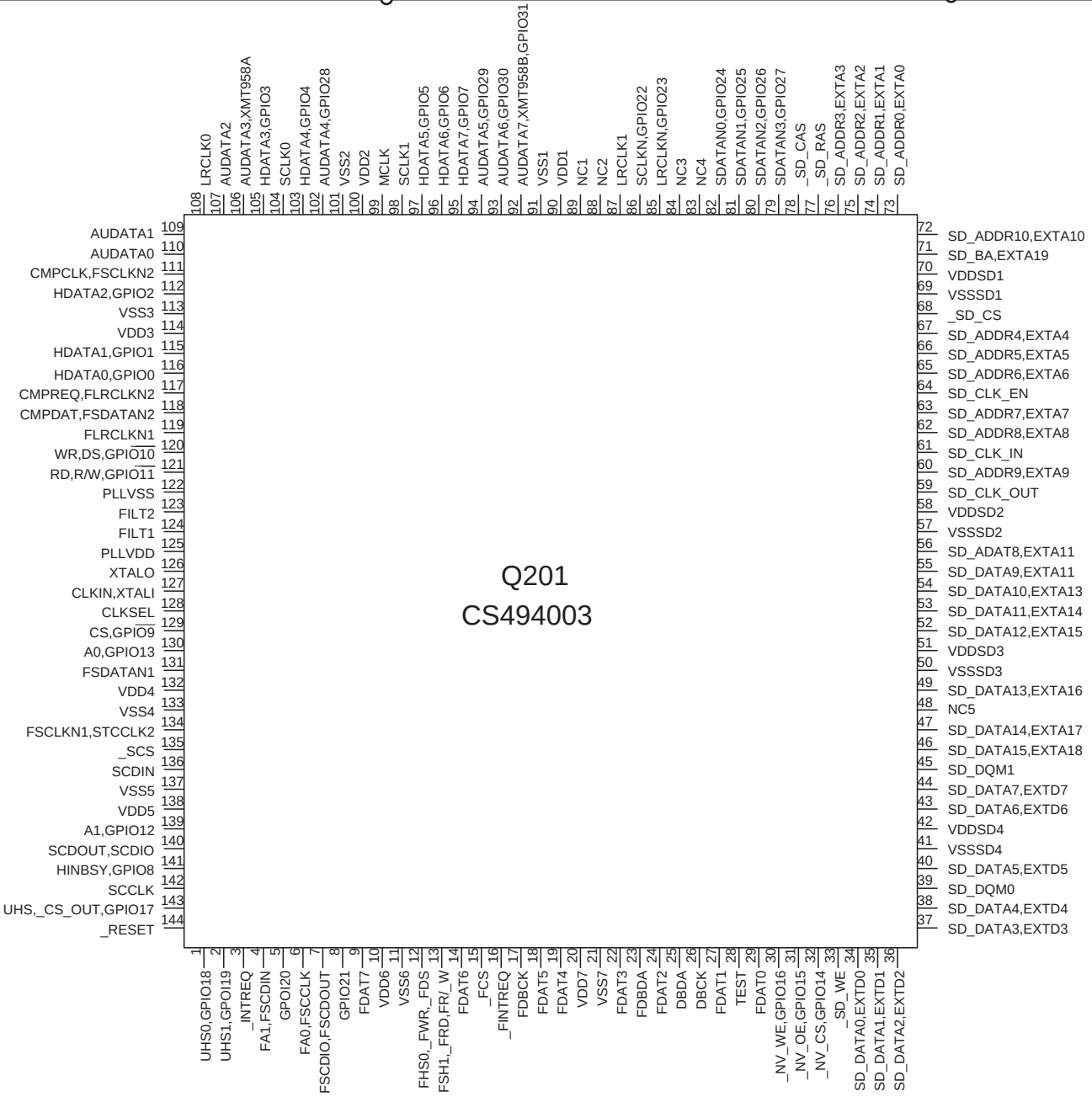

IC BLOCK DIAGRAMS AND DESCRIPTIONS

CS494003(Audio Decoder DSP)

PIN NO.	TERMINAL NAME/DESCRIPTION
1	UHS0, GPIO18 :DSPC control mode select Bit 0, General Purpose I/O
2	UHS1, GPIO19 :DSPC control mode select Bit 1, General Purpose I/O
3	INTREQ:Control Port Interrupt Request
4	FA1, FSCDIN:Host parallel address bit zero or SPI rerial control data input
5	GPIO20:General Purpose I/O can be individually configured and controlled by DSPC.
6	FAO, FSCCLK:Host Parallel Address Bit Zero or Serial Control Port Clock
7	FHS2, FSCDIO, FSCDOUT:Mode select bit 2 or serial control port data input and output,parallel porttype select
8	GPIO21:General Purpose I/O can be individually configured and controlled by DSPC.
9	FDAT7:DSPAB Bidirectional Data Bus input
10	VDD6:2.5V supply voltage.
11	VSS6:2.5V ground.
12	FHS0, FWR, FDS:Mode select bit 0 or host write strobe or host data strobe
13	FHS1, FRD, FR/W:Mode select bit 1 or host parallel output enable or host parallel R/W
14	FDAT6:DSPAB Bidirectional Data Bus input
15	FCS:Host parallel chip select,Host serial SPI chip select
16	FINTREQ:Control port interrupt request
17	FDBCK:Reversed input:This pin is reversed and is pulled up with an external resistor.
18	FDAT5:DSPAB Bidirectional Data Bus input
19	FDAT4:DSPAB Bidirectional Data Bus input
20	VDD7:2.5V supply voltage.
21	VSS7:2.5V ground.
22	FDAT3:DSPAB Bidirectional Data Bus input
23	FDBDAReversed input:This pin is reversed and is pulled up with an external resistor.
24	FDAT2:DSPAB Bidirectional Data Bus input
25	DBDA:Debug data
26	DBCK:Debug clock
27	FDAT1:DSPAB Bidirectional Data Bus input
28	TEST:This pin is connected low for normal operation.
29	FDAT0:DSPAB Bidirectional Data Bus input
30	NV_WE, GPIO16:SRAM write enable output, General Purpose I/O
31	NV_OE, GPIO15:SRAM output Enable output, General Purpose I/O
32	NV_CS, GPIO14:SRAM Chip Select output, General Purpose I/O
33	SD_WE :SDRAM write enable output.
34	SD_DATA0, EXTD0:SDRAM data bus. SRAM external data bus input.
35	SD_DATA1, EXTD1:SDRAM data bus. SRAM external data bus input.
36	SD_DATA2, EXTD2:SDRAM data bus. SRAM external data bus input.
37	SD_DATA3, EXTD3:SDRAM data bus. SRAM external data bus input.
38	SD_DATA4, EXTD4:SDRAM data bus. SRAM external data bus input.
39	SD_DQM0:SDRAM data mask 0 output.
40	SD_DATA5, EXTD5:SDRAM data bus. SRAM external data bus input.
41	VSSSD4:3.3V SDRAM / SRAM / EPROM Interface ground.
42	VDDSD4:3.3V SDRAM / SRAM / EPROM Interface supply
43	SD_DATA6, EXTD6:SDRAM data bus. SRAM external data bus input.
44	SD_DATA7, EXTD7:SDRAM data bus. SRAM external data bus input.
45	SD_DQM1:SDRAM data mask 1 output.
46	SD_DATA15, EXTA18:SDRAM data bus output, SRAM external address bus output
47	SD_DATA14, EXTA17:SDRAM data bus output, SRAM external address bus output
48	NC5:No connect. Connect to ground.

IC BLOCK DIAGRAMS AND DESCRIPTIONS

CS494003(Audio Decoder DSP)

PIN NO.	TERMINAL NAME/DESCRIPTION
49	SD_DATA13, EXTA16:SDRAM data bus output, SRAM external address bus output
50	VSSSD3:3.3V SDRAM / SRAM / EPROM Interface ground.
51	VDDSD3:3.3V SDRAM / SRAM / EPROM Interface supply
52	SD_DATA12, EXTA15:SDRAM data bus output, SRAM external address bus output
53	SD_DATA11, EXTA14:SDRAM data bus output, SRAM external address bus output
54	SD_DATA10, EXTA13:SDRAM data bus output, SRAM external address bus output
55	SD_DATA9, EXTA12:SDRAM data bus output, SRAM external address bus output
56	SD_DATA8, EXTA11:SDRAM data bus output, SRAM external address bus output
57	VSSSD2:3.3V SDRAM / SRAM / EPROM Interface ground.
58	VDDSD2:3.3V SDRAM / SRAM / EPROM Interface supply
59	SD_CLK_OUT:SDRAM clock output.
60	SD_ADDR9, EXTA9:SDRAM address bus output. SRAM external address output.
61	SD_CLK_IN:SDRAM re-timing clock input.
62	SD_ADDR8, EXTA8:SDRAM address bus output. SRAM external address output.
63	SD_ADDR7, EXTA7:SDRAM address bus output. SRAM external address output.
64	SD_CLK_EN:SDRAM clock enable output.
65	SD_ADDR6, EXTA6:SDRAM address bus output. SRAM external address output.
66	SD_ADDR5, EXTA5:SDRAM address bus output. SRAM external address output.
67	SD_ADDR4, EXTA4:SDRAM address bus output. SRAM external address output.
68	SD_CS:SDRAM Chip select
69	VSSSD1:3.3V SDRAM / SRAM / EPROM Interface ground.
70	VDDSD1:3.3V SDRAM / SRAM / EPROM Interface supply
71	SD_BA, EXTA19:SDRAM bank address select, SRAM external address bus 19.
72	SD_ADDR10, EXTA10:SDRAM address bus output. SRAM external address output.
73	SD_ADDR0, EXTA0:SDRAM address bus output. SRAM external address output.
74	SD_ADDR1, EXTA1:SDRAM address bus output. SRAM external address output.
75	SD_ADDR2, EXTA2:SDRAM address bus output. SRAM external address output.
76	SD_ADDR3, EXTA3:SDRAM address bus output. SRAM external address output.
77	SD_RAS:SDRAM row address strobe output.
78	SD_CAS:DRAM column address strobe output.
79	SDATAN3, GPIO27:Digital-audio PCM data input. General purpose I/O
80	SDATAN2, GPIO26:Digital-audio PCM data input. General purpose I/O
81	SDATAN1, GPIO25:Digital-audio PCM data input. General purpose I/O
82	SDATAN0, GPIO24:Digital-audio PCM data input. General purpose I/O
83	NC4:No connect. Connect to ground.
84	NC3:No connect. Connect to ground.
85	LRCLKN, GPIO23:PCM Audio Input Sample Rate Clock, General Purpose I/O
86	SCLKN, GPIO22:PCM Audio Input Bit Clock, General Purpose I/O
87	LRCLK1:Audio Output Sample Rata Clock
88	NC2:No connect. Connect to ground.
89	NC1:No connect. Connect to ground.
90	VDD1:2.5V supply voltage.
91	VSS1:2.5V ground
92	AUDATA7, XMT958B, GPIO31:PCM digital-audio data output 7, S/PDIF Transmitter, General Purpose I/O
93	AUDATA6, GPIO30:PCM digital-audio data output 6, General Purpose I/O
94	AUDATA5, GPIO29:PCM digital-audio data output 5, General Purpose I/O
95	HDATA7, GPIO7:DSPC Bidirectional Data Bus, General Purpose I/O
96	HDATA6, GPIO6:DSPC Bidirectional Data Bus, General Purpose I/O

IC BLOCK DIAGRAMS AND DESCRIPTIONS

CS494003(Audio Decoder DSP)

PIN NO.	TERMINAL NAME/DESCIPTION
97	HDATA5, GPIO5:DSPC Bidirectional Data Bus, General Purpose I/O
98	SCLK1 :Audio Output Bit Clock:Bidirectional digital-audio output bit clock for AUDATA4, to AUDATA7.
	As an output, SCLK1 can provide 32 fs, 64 fs, 128 fs, 256 fs, or 512 fs frequencies and is synchronous to MCLK.
99	MCLK:Bidirectional master audio clock. As an output, MCLK provides a low jitter oversampling clock.
100	VDD2:2.5V supply voltage.
101	VSS2:2.5V ground.
102	AUDATA4, GPIO28:Digital Audio Output 4, General Purpose I/O.PCM digital-audio data output.
103	HDATA4, GPIO4:DSPC Bidirectional Data Bus, General Purpose I/O
104	SCLK0 :Audio Output Bit Clock:Bidirectional digital-audio output bit clock for AUDATA0, to AUDATA3.
105	HDATA3, GPIO3:DSPC Bidirectional Data Bus, General Purpose I/O
106	AUDATA3, XMT958A:Digital Audio Output 3, S/PDIF Transmitter
107	AUDATA2:PCM digital-audio data output.
108	LRCLK0:Audio Output Sample Rate Clock
109	AUDATA1:PCM digital-audio data output.
110	AUDATA0:PCM digital-audio data output.
111	CMPCLK, FSCLKN2:PCM Audio Input Bit Clock:Digital- audio bit clock input.
112	HDATA2, GPIO2:DSPC Bidirectional Data Bus, General Purpose I/O
113	VSS3:2.5V ground.
114	VDD3:2.5V supply voltage.
115	HDATA1, GPIO1:DSPC Bidirectional Data Bus, General Purpose I/O
116	HDATA0, GPIO0:DSPC Bidirectional Data Bus, General Purpose I/O
117	CMPREQ, FLRCLKN2:PCM audio input request
118	CMPDAT, FSDATAN2:Digital-audio data input that can accept either one compressed line or 2 channels of PCM data.
119	FLRCLKN1:Digital-audio frame clock input.
120	WR, DS, GPIO10:Host Write Strobe, Host Data Strobe, General Purpose I/O
121	RD, R/W, GPIO11:Host Parallel Output Enable, Host Parallel R/W, General Purpose I/O
122	PLLVSS :PLL Ground Voltage
123	FILT2: Phase-Locked Loop Filter. Connects to an external filter for the phase-locked loop.
124	FILT1: Phase-Locked Loop Filter. Connects to an external filter for the phase-locked loop.
125	PLLVDD:2.5V PLL supply voltage.
126	XTALO: Crystal oscillator output.
127	CLKIN, XTALI:External Clock input / Crystal Oscillator input:12MHz crystal oscillator is connected.
128	CLKSEL:DSP Clock select input
129	CS, GPIO9:Host Parallel Chip Select, General Purpose I/O
130	A0, GPIO13:Host Address Bit 0, General Purpose I/O
131	FSDATAN1:Digital-audio data input can accept from one compressed line or 2 channels of PCM data.
132	VDD4:2.5V supply voltage.
133	VSS4:2.5V ground.
134	FSCLKN1, STCCLK2:Digital audio bit clock input.
135	SCS:Host Serial SPI Chip Select:SPI mode active-low chip-select input signal.
136	SCDIN:SPI Serial Control Data Input:In SPI mode this pin serves as the data input pin.
137	VSS5:2.5V ground.
138	VDD5:2.5V supply voltage.
139	A1, GPIO12:Host Address Bit 1, General Purpose I/O
140	SCDOUT, SCDIO:Serial Control Port Data Input and Output:In SPI mode this pin serves as the data output pin.
141	HINBSY, GPIO8: Input host Message Status, General Purpose I/O. This pin is indicates that serial or parallel communication data written to the DSP has not been read yet.
142	SCCLK :This pin serves as the serial SPI clock input.
143	UHS2, CS_OUT, GPIO17:Mode Select Bit 2, External Serial Memory Chip Select,General Purpose I/O
144	RESET :Master Reset Input:Asynchronous active-low master reset input.

IC BLOCK DIAGRAMS AND DESCRIPTIONS

CS5340-CZZ(101dB,192kHz, Multi-Bit Audio A/D Converter)

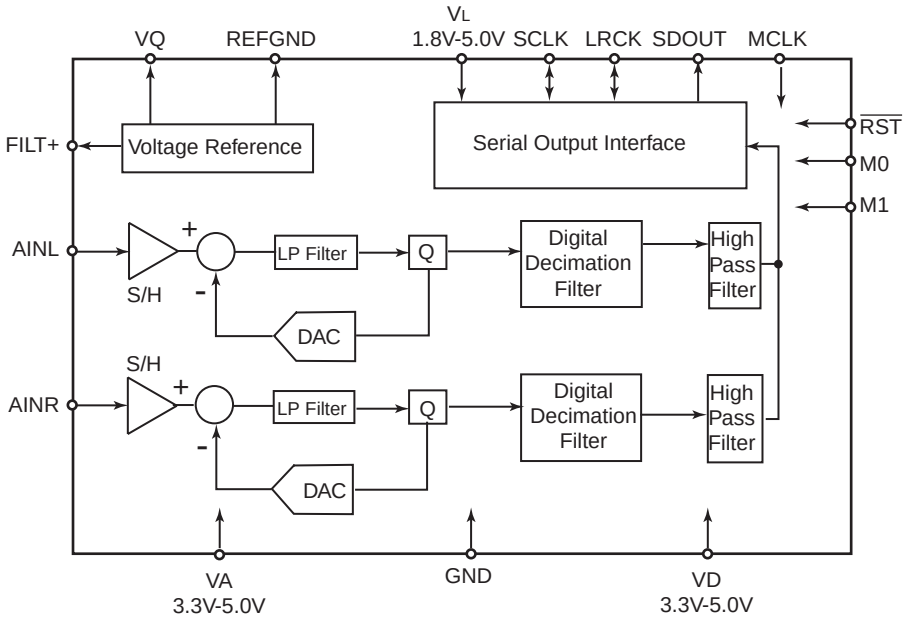

Pin	Pin Name	I/O	Description
1	M0	I	Mode Selection-Determines the operational mode of the device.
16	M1	I	
2	MCLK	I	Master Clock-Clock source for the delta-sigma modulator and digital filters.
3	VL		Logic Power-Positive power supply for digital input/output.
4	SDOUT	O	Serial Audio Data Output-Output for two's complement serial audio data.
5,14	GND		Ground-Connect to the analog ground.
6	VD	I	Digital Power-Positive power supply for the digital section.
7	SCLK	I/O	Serial Clock-Serial clock for the serial audio interface.
8	LRCK	I/O	Left Right Clock-Determines which channel, Left and Right, is currently active on the serial audio data line.
9	RST	I	Reset-The device enters a low power mode when low.
10 12	AINL AINR	I I	Analog Input-The full scale analog input level is 0.56Vp-p.
11	VQ	O	Quiescent Voltage-Filter connection for the internal quiescent reference voltage.
13	VA		Analog Power-Positive power supply for the analog section.
15	FILT+	O	Positive Voltage Reference-Positive reference voltage for the internal sampling circuits.

IC BLOCK DIAGRAMS AND TERMINAL DESCRIPTIONS

IC42S16100 (16-Mbit Synchronous Dynamic RAM)

BLOCK DIAGRAM

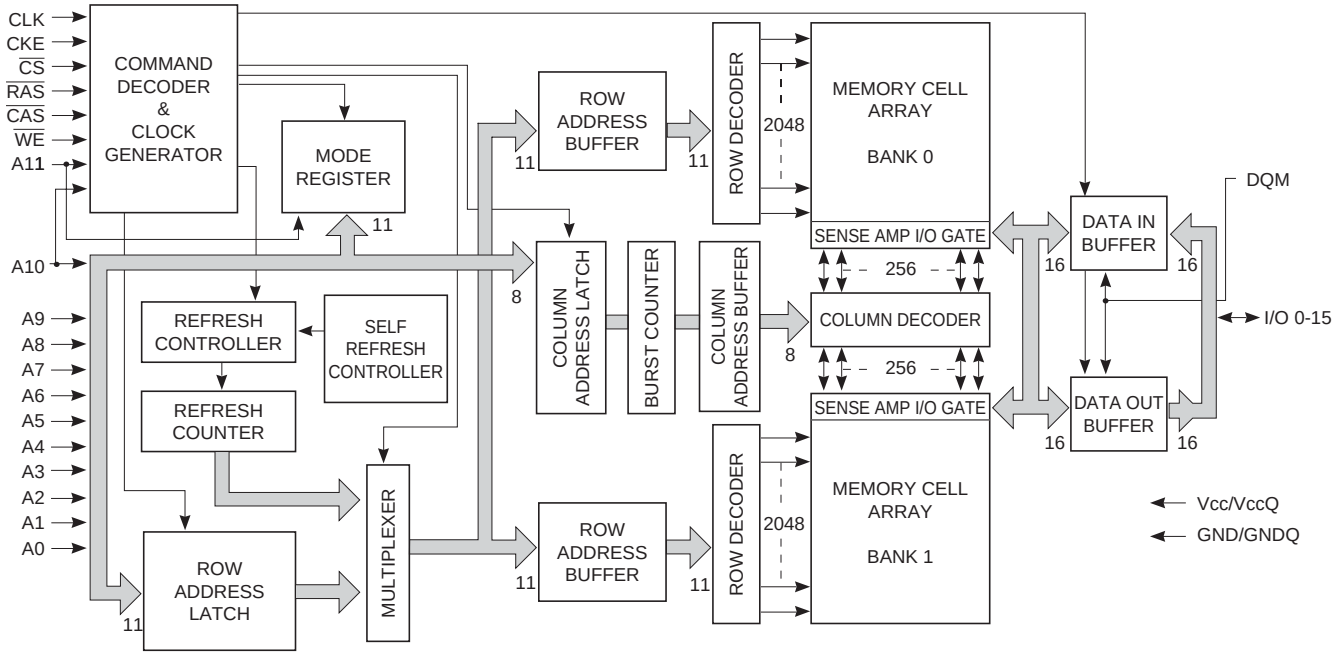

PIN LAYOUT

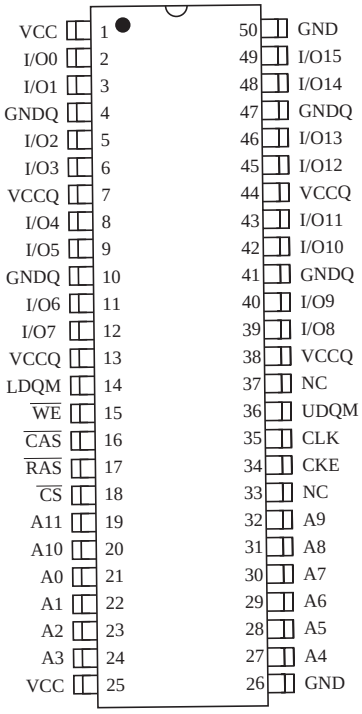

Pin No.	Pin name	Function
20 to 24 27 to 32	A0-A10	A0 to A10 are address inputs. A0-A10 are used as row address inputs during active command input and A0-A7 as column address inputs during read or write command input. A10 is also used to determine the precharge mode during other commands. If A10 is LOW during precharge command, the bank selected by A11 is precharged, but if A10 is HIGH, both banks will be precharged. When A10 is HIGH in read or write command cycle, the precharge starts automatically after the burst access. These signals become part of the OP CODE during mode register set command input.
19	A11	A11 is the bank selection signal. When A11 is LOW, bank 0 is selected and when high, bank 1 is selected. This signal becomes part of the OP CODE during mode register set command input.
16	$\overline{CAS}$	$\overline{CAS}$, in conjunction with the $\overline{RAS}$ and $\overline{WE}$, forms the device command. See the "Command Truth Table" item for details on device commands.
34	CKE	The CKE input determines whether the CLK input is enabled within the device. When is CKE HIGH, the next rising edge of the CLK signal will be valid, and when LOW, invalid. When CKE is LOW, the device will be in either the power-down mode, the clock suspend mode, or the self refresh mode. The CKE is an asynchronous input.
35	CLK	CLK is the master clock input for this device. Except for CKE, all inputs to this device are acquired in synchronization with the rising edge of this pin.
18	$\overline{CS}$	The $\overline{CS}$ input determines whether command input is enabled within the device. Command input is enabled when $\overline{CS}$ is LOW, and disabled with $\overline{CS}$ is HIGH. The device remains in the previous state when $\overline{CS}$ is HIGH.
2, 3, 5, 6, 8, 9, 11, 12, 39, 40, 42, 43, 45, 46, 48, 49	I/O0 to I/O15	I/O00 to I/O15 are I/O pins. I/O through these pins can be controlled in byte units using the LDQM and UDQM pins.
14, 36	LDQM, UDQM	LDQM and UDQM control the lower and upper bytes of the I/O buffers. In read mode, LDQM and UDQM control the output buffer. When LDQM or UDQM is LOW, the corresponding buffer byte is enabled, and when HIGH, disabled. The outputs go to theHIGH impedance state when LDQM/UDQM is HIGH. This function corresponds to $\overline{OE}$ in conventional DRAMs. In write mode, LDQM and UDQM control the input buffer. When LDQM or UDQM is LOW, the corresponding buffer byte is enabled, and data can be written to the device. When LDQM or UDQM is HIGH, input data is masked and cannot be written to the device.
17	$\overline{RAS}$	$\overline{RAS}$, in conjunction with $\overline{CAS}$ and $\overline{WE}$, forms the device command. See the "Command Truth Table" item for details on device commands.
15	$\overline{WE}$	$\overline{WE}$, in conjunction with $\overline{RAS}$ and $\overline{CAS}$, forms the device command. See the "Command Truth Table" item for details on device commands.
7, 13, 38, 44	$V_{CC}Q$	$V_{CC}Q$ is the output buffer power supply.
1, 25	V_{CC}	V_{CC} is the device internal power supply.
4, 10, 41, 47	GNDQ	GNDQ is the output buffer ground.
26, 50	GND	GND is the device internal ground.

IC BLOCK DIAGRAMS AND DESCRIPTIONS

LC74763-9836 (On-Screen Display IC)

BLOCK DIAGRAM

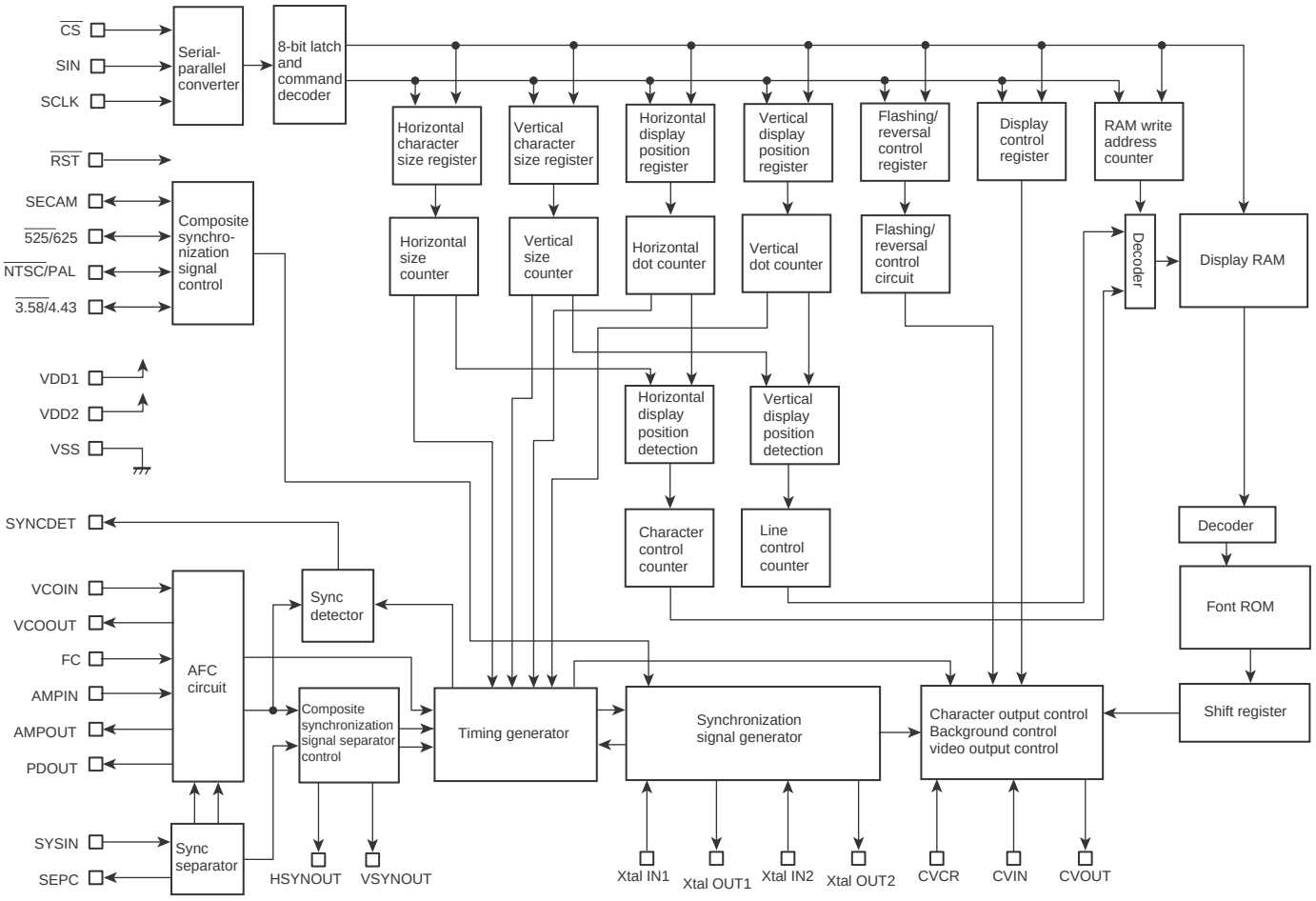

IC BLOCK DIAGRAMS AND DESCRIPTIONS

LC74763-9836 (On-Screen Display IC)

TERMINAL DESCRIPTION

Pin No.	Symbol	Function	Description
1	V_{SS}	Ground	Ground connection
2	$Xtal_{IN1}$	Crystal oscillator connection	Connection for the crystal and capacitor used to form the crystal oscillator that generates the internal synchronization signal. The oscillator can be selected with a command switch.
3	$Xtal_{OUT1}$		
4	$HSYNC_{OUT}$	Horizontal synchronization output	Outputs the horizontal synchronization signal (AFC). The output polarity can be selected (metal option). Also functions as general output port (command switch).
5	$Xtal_{IN2}$	Crystal oscillator connection	Connection for the crystal and capacitor used to form the crystal oscillator that generates the internal synchronization signal.
6	$Xtal_{OUT2}$		
7	$VSYNC_{OUT}$	Vertical synchronization output	Outputs the vertical synchronization signal. The output polarity can be selected (metal option). Also functions as general output port (command switch).
8	$\overline{CS}$	Enable input	Enables/disables serial data input. Serial data is enabled when this pin is low (hysteresis input). Pull-up resistor built in (metal option).
9	SIN	Data input	Serial data input (hysteresis input). Pull-up resistor built in (metal option).
10	SCLK	Clock input	Clock input for serial data input (hysteresis input). Pull-up resistor built in (metal option).
11	SECAM	SECAM mode switch input/ output (command switch)	During input, switches between SECAM and other modes. During output, functions as general output port or internal V output (command switch). Low = other modes, high = SECAM mode
12	$\overline{525}$/625	525/625 switch input/output (command switch)	During input, switches between 525 scan lines and 625 scan lines. During output, functions as general output port or character data output (command switch). Low = 525 lines, high = 625 lines
13	$\overline{NTSC}$/PAL	NTSC/PAL switch input/output (command switch)	Switches the color mode between NTSC and PAL. During output, functions as general output port or frame data output (command switch). Low = NTSC, high = PAL
14	$\overline{3.58}$/4.43	3.58/4.43 switch input/output (command switch)	Switch FSC between 3.58 MHz and 4.43 MHz. During output, functions as general output port or halftone output (command switch). Low = 3.58, high = 4.43
15	$\overline{RST}$	Reset input	System reset input pin, low is active (hysteresis input). Pull-up resistor built in (metal option).
16	CV_{OUT}	Video signal output	Composite video output
17	V_{DD2}	Power supply connection	Power supply connection for composite video signal level generation
18	CV_{IN}	Video signal input	Composite video input
19	CV_{CR}	Video signal input	SECAM chroma signal input
20	$SYNC_{IN}$	Sync separator circuit input	Built-in sync separator circuit video signal input
21	SEP_{C}	Sync separator circuit	Built-in sync separator circuit
22	V_{SS}	Ground	Ground connection
23	PD_{OUT}	Control voltage output	AFC control voltage output
24	AMP_{IN}	AFC filter connection	Filter connection
25	AMP_{OUT}		
26	FC	Control voltage input	AFC control voltage input
27	VCO_{IN}	LC oscillator connection	VCO LC oscillator circuit coil and capacitor connection
28	VCO_{OUT}		
29	$SYNC_{DET}$	External synchronization signal detection output	Outputs the exclusive NOR of the horizontal synchronization signal (AFC) and CSYNC (sync separator). The output polarity can be selected (metal option). Also functions as general output port (command switch).
30	V_{DD1}	Power supply connection	Power supply connection (+5 V: digital system power supply)

IC BLOCK DIAGRAM AND TERMINAL DESCRIPTIONS

LA7106M (6ch AMP + Driver)

BLOCK DIAGRAM

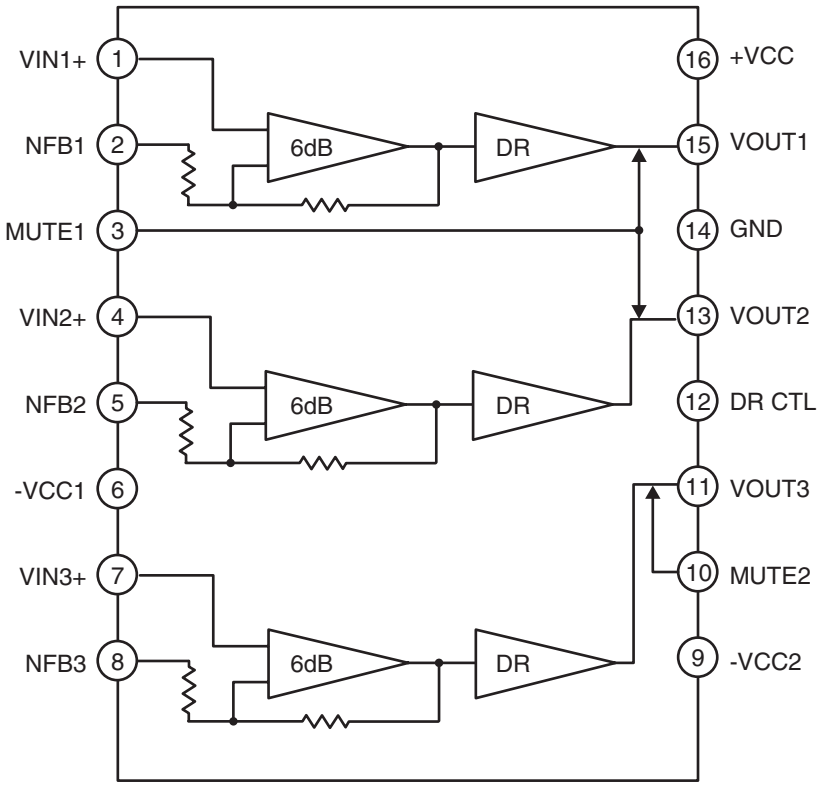

TRUTH TABLE

	Pins 3 , 10	Pin 12
H	Through	150 ohm Drive
L	Mute	75 ohm Drive

IC BLOCK DIAGRAMS AND DESCRIPTIONS

MX26LV040-70/EN29LV040A(4M-bit CMOS High Speed Flash Memory)

BLOCK DIAGRAM

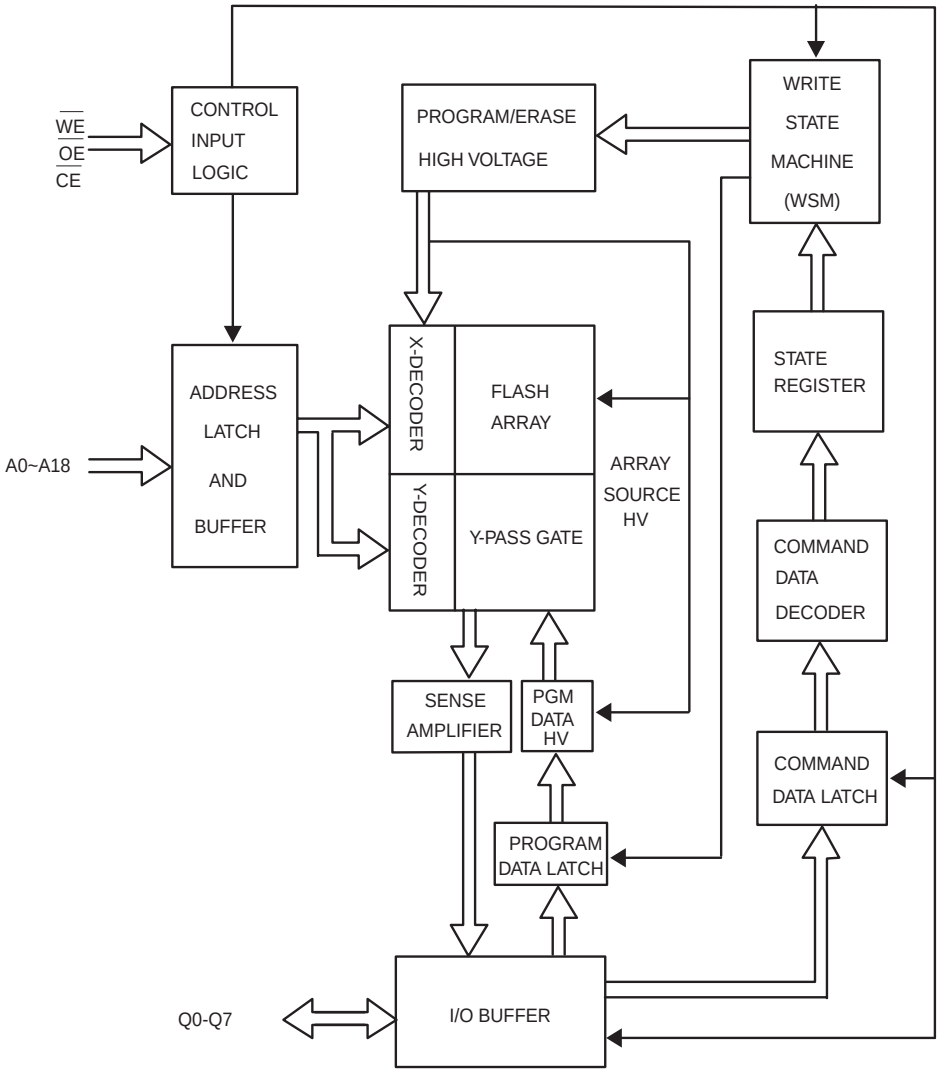

BLOCK DIAGRAM

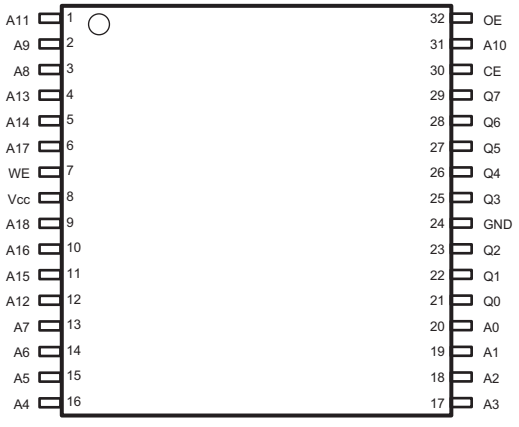

PIN DESCRIPTION

SYMBOL	PIN NAME
A0~A18	Address Input
Q0~Q7	Data Input/Output
$\overline{CE}$	Chip Enable Input
$\overline{WE}$	Write Enable Input
$\overline{OE}$	Output Enable Input
VCC	Power Supply Pin (+5V)
GND	Ground Pin

IC BLOCK DIAGRAMS AND DESCRIPTIONS

NJM2595M(5-INPUT 3-OUTPUT VIDEO SWITCH)

BLOCK DIAGRAM

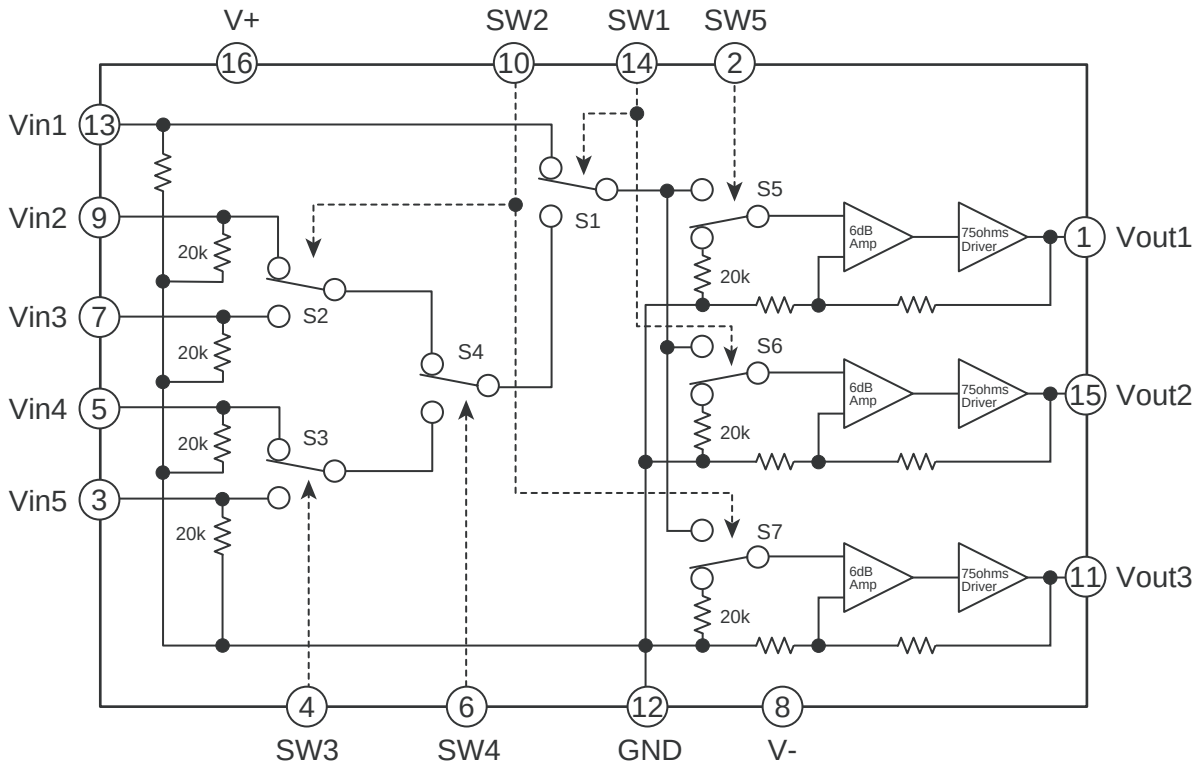

TRUTH TABLE

Control Signal vs. Output Signal (L=VCL, H=VCH, X=L or H)

SW1	SW2	SW3	SW4	SW5	Vout1	Vout2	Vout3
L	H	X	X	H	Vin1	MUTE	Vin1
	L			H	Vin1	MUTE	MUTE
	H			L	MUTE	MUTE	Vin1
H	L	X	L	H	Vin2	Vin2	MUTE
				L	MUTE	Vin2	MUTE
H	H	X	L	H	Vin3	Vin3	Vin3
				L	MUTE	Vin3	Vin3
H	H	L	H	H	Vin4	Vin4	Vin4
	H			L	MUTE	Vin4	Vin4
	L			H	Vin4	Vin4	MUTE
	L			L	MUTE	Vin4	MUTE
H	H	H	H	H	Vin5	Vin5	Vin5
	H			L	MUTE	Vin5	Vin5
	L			H	Vin5	Vin5	MUTE
	L			L	MUTE	Vin5	MUTE
L	L	X	X	L	MUTE	MUTE	MUTE

IC BLOCK DIAGRAMS AND DESCRIPTIONS

NJU7311AM (Analog Function Switch)

BLOCK DIAGRAM

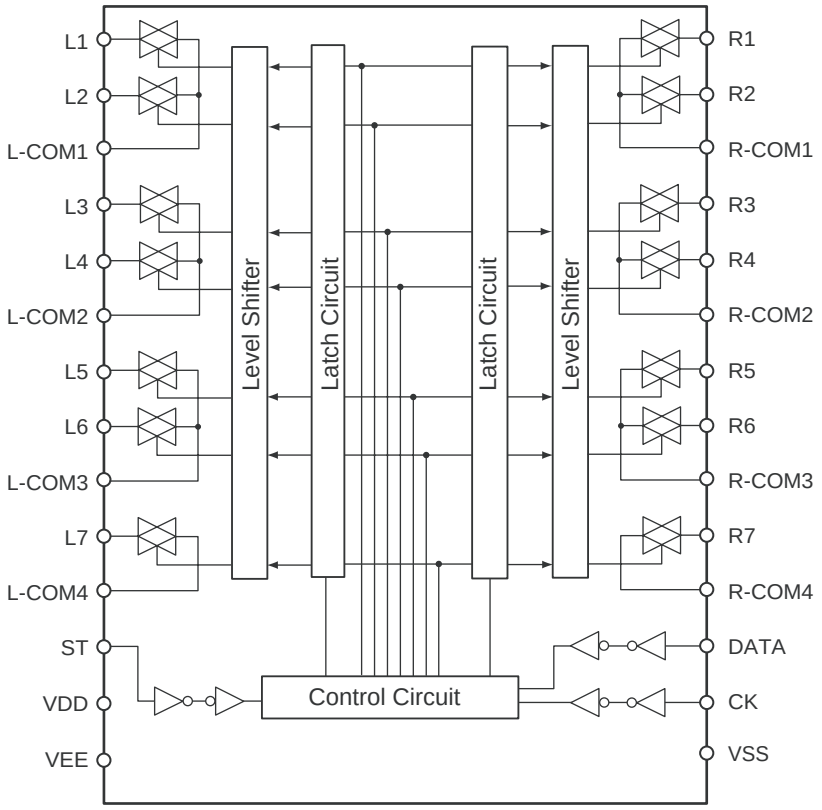

TERMINAL DESCRIPTION

Pin No.	Pin Name	Description
1	VEE	Negative Voltage Supply
2	L1	Analog switch input/output
3	L2	Analog switch input/output
4	L-COM1	L1, L2, Common
5	L3	Analog switch input/output
6	L4	Analog switch input/output
7	L-COM2	L3, L4 common
8	L5	Analog switch input/output
9	L6	Analog switch input/output
10	L-COM3	L5, L6 Common
11	L7	Analog switch input/output
12	L-COM4	L7 Common
13	ST	Chip enable
14	VSS	GND

Pin No.	Pin Name	Description
15	CK	Clock input
16	DATA	Data input
17	R-COM4	R7 Common
18	R7	Analog switch input/output
19	R-COM3	R5, R6 Common
20	R6	Analog switch input/output
21	R5	Analog switch input/output
22	R-COM2	R3, R4 Common
23	R4	Analog switch input/output
24	R3	Analog switch input/output
25	R-COM1	R1, R2, Common
26	R2	Analog switch input/output
27	R1	Analog switch input/output
28	VDD	Positive voltage supply

IC BLOCK DIAGRAMS AND DESCRIPTIONS

NJW1157(8-Channel Electronic Volume with Input Selector)

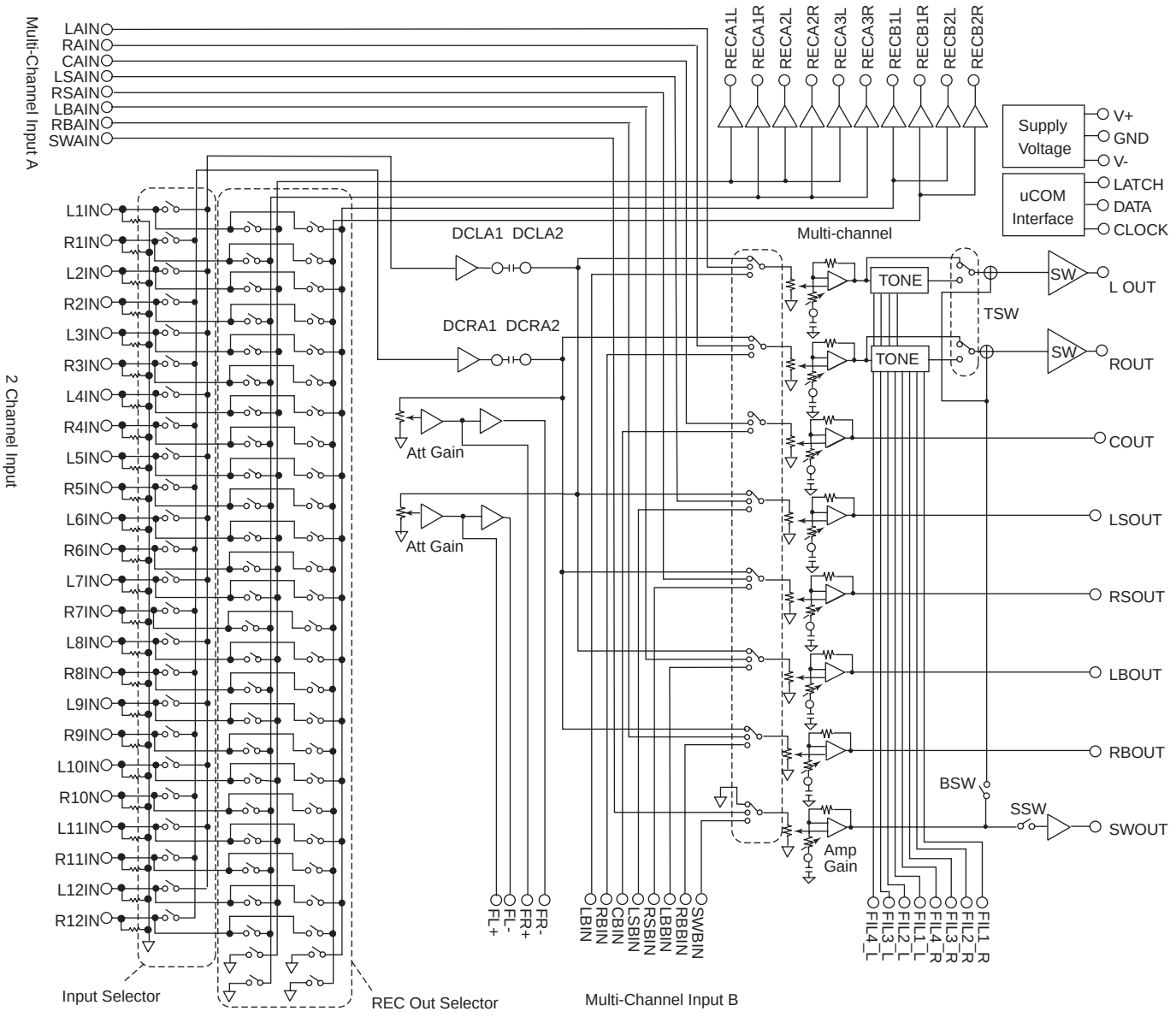

IC BLOCK DIAGRAMS AND DESCRIPTIONS

NJW1157(8-Channel Electronic Volume with Input Selector)

PIN FUNCTION

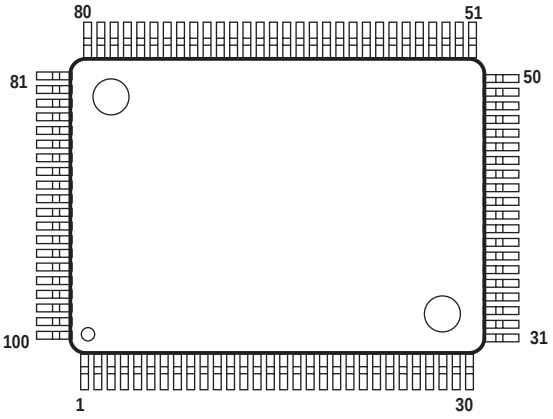

No.	SYMBOL	FUNCTION	No.	SYMBOL	FUNCTION
1	LOUT	Lch output	51	L1IN	"Input selector" Lch input 1
2	ROUT	Rch output	52	R1IN	"Input selector" Rch input 1
3	COUT	Cch output	53	L2IN	"Input selector" Lch input 2
4	LSOUT	LSch output	54	R2IN	"Input selector" Rch input 2
5	RSOUT	RSch output	55	L3IN	"Input selector" Lch input 3
6	LBOUT	LBch output	56	R3IN	"Input selector" Rch input 3
7	RBOUT	RBch output	57	L4IN	"Input selector" Lch input 4
8	SWOUT	SWch output	58	R4IN	"Input selector" Rch input 4
9	DC_L1	Lch Bass filter DC cut capacitor output terminal	59	L5IN	"Input selector" Lch input 5
10	DC_L2	Lch Bass filter DC cut capacitor input terminal	60	R5IN	"Input selector" Rch input 5
11	FIL_BL	Lch Bass filter terminal	61	L6IN	"Input selector" Lch input 6
12	FIL_TL	Lch Treble filter terminal	62	R6IN	"Input selector" Rch input 6
13	DC_R1	Rch Bass filter DC cut capacitor output terminal	63	L7IN	"Input selector" Lch input 7
14	DC_R2	Rch Bass filter DC cut capacitor input terminal	64	R7IN	"Input selector" Rch input 7
15	FIL_BR	Rch Bass filter terminal	65	L8IN	"Input selector" Lch input 8
16	FIL_TR	Rch Treble filter terminal	66	R8IN	"Input selector" Rch input 8
17	N.C.	No connect	67	L9IN	"Input selector" Lch input 9
18	N.C.	No connect	68	R9IN	"Input selector" Rch input 9
19	V+	+ Power supply voltage input	69	L10IN	"Input selector" Lch input 10
20	V-*	- Power supply voltage input	70	R10IN	"Input selector" Rch input 10
21	REC_A1L	"Input selector" Lch REC output A1	71	L11IN	"Input selector" Lch input 11
22	REC_A1R	"Input selector" Rch REC output A1	72	R11IN	"Input selector" Rch input 11
23	REC_A2L	"Input selector" Lch REC output A2	73	L12IN	"Input selector" Lch input 12
24	REC_A2R	"Input selector" Rch REC output A2	74	R12IN	"Input selector" Rch input 12
25	REC_A3L	"Input selector" Lch REC output A3	75	NC	No connect
26	REC_A3R	"Input selector" Rch REC output A3	76	DGND	Digital Ground
27	REC_B1L	"Input selector" Lch REC output B1	77	DATA	Control data signal input
28	REC_B1R	"Input selector" Rch REC output B1	78	CLOCK	Clock signal input
29	REC_B2L	"Input selector" Lch REC output B2	79	LATCH	Latch signal input
30	REC_B2R	"Input selector" Rch REC output B2	80	LAIN	Multi-channel Lch input A
31	DCCAP_L	Switching noise rejection capacitor	81	RAIN	Multi-channel Rch input A
32	DCCAP_R	Switching noise rejection capacitor	82	CAIN	Multi-channel Cch input A
33	DCCAP_C	Switching noise rejection capacitor	83	LSAIN	Multi-channel LSch input A
34	GND	Ground	84	RSAIN	Multi-channel RSch input A
35	GND	Ground	85	LBAIN	Multi-channel LBch input A
36	DCCAP_LS	Switching noise rejection capacitor	86	RBAIN	Multi-channel RBch input A
37	DCCAP_RS	Switching noise rejection capacitor	87	SWAIN	Multi-channel SWch input A
38	DCCAP_LB	Switching noise rejection capacitor	88	LBIN	Multi-channel Lch input B
39	DCCAP_RB	Switching noise rejection capacitor	89	RBIN	Multi-channel Rch input B
40	DCCAP_SW	Switching noise rejection capacitor	90	CBIN	Multi-channel Cch input B
41	DCL_OUT	"Input selector" Lch output	91	LSBIN	Multi-channel LSch input B
42	DCL_IN	"Multi-channel selector" Lch output	92	RSBIN	Multi-channel RSch input B
43	DCR_OUT	"Input selector" Rch output	93	LBBIN	Multi-channel LBch input B
44	DCR_IN	"Multi-channel selector" Rch output	94	RBBIN	Multi-channel RBch input B
45	FL+	"Input selector gain control" Lch no-inverted output	95	SWBIN	Multi-channel SWch input B
46	FL-	"Input selector gain control" Lch inverted output	96	GND	Ground
47	FR+	"Input selector gain control" Rch no-inverted output	97	GND	Ground
48	FR-	"Input selector gain control" Rch inverted output	98	VSSOUT2	Internal Digital -Power Supply Output 2
49	VDDOUT	Internal Digital +Power Supply Output	99	VDDOUT2	Internal Digital +Power Supply Output 2
50	VSSOUT	Internal Digital -Power Supply Output	100	TCCAP	Switching noise rejection capacitor

IC BLOCK DIAGRAMS AND DESCRIPTIONS

74HC04F(Hex Inverter)

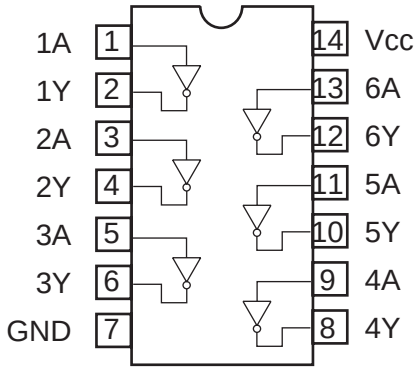

TC74VHC157FT(Quad 2-channel Multiplexer)

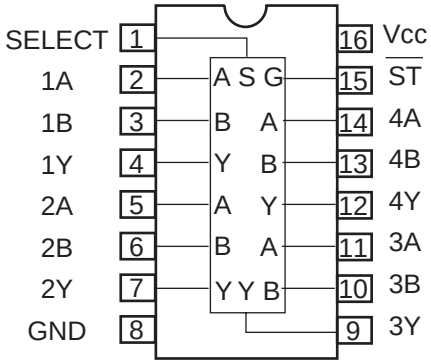

Truth Table

INPUTS				OUTPUT
ST	SELECT	A	B	
H	X	X	X	L
L	L	L	X	L
L	L	H	X	H
L	H	X	L	L
L	H	X	H	H

X:Don't care

TC74VHC541FT/T541AFT(Octal buss buffer)

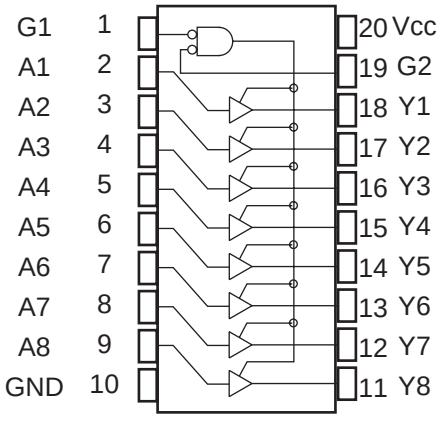

Truth Table

INPUTS			OUTPUT
G1	G2	An	Yn
H	X	X	Z
X	H	X	Z
L	L	H	H
L	L	L	L

X:Don't care
Z:High Impedance

TC7WU04FU(3 Inverter)

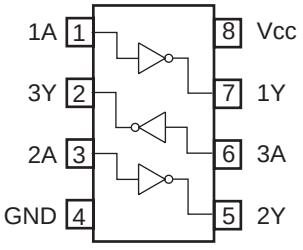

IC BLOCK DIAGRAM AND DESCRIPTION

FL TUBE(HNA-16SM10T)

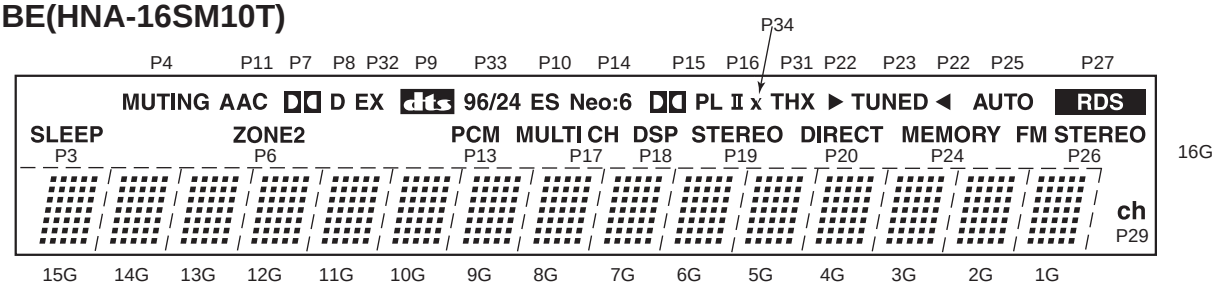

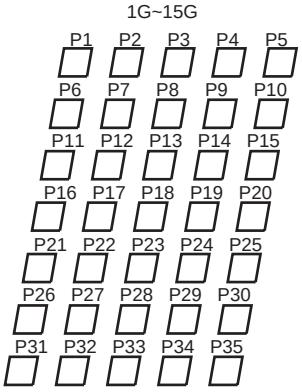

M66005 TERMINAL DESCRIPTION

PIN NO.	SYMBOL	PIN NAME	DESCRIPTION
13	$\overline{\text{RESET}}$	Reset input	This pin is used to initialize the internal state of the M66005.
14	$\overline{\text{CS}}$	Chip select input	"L" : Communication with the MCU is possible. "H" : Any instruction from the MCU is neglected.
15	SCK	Shift clock input	At the rising edge from "L" to "H", input data is shifted.
16	SDATA	Serial data input	Character code or command data to display is input from MSB.
21, 20	XIN, XOUT	Clock input Clock output	This pin is used to connect a resister and a capacitor externally to set oscillation frequency.
1~12 61~64	DIG00 ~ DIG15	Digit output	These pins are used to connect to digit pins of VFD.
23~31 33~59	SEG00 ~ SEG39	Segment output	These pins are used to connect to segment pins of VFD.
17, 18	P0, P1		Output port (static operation)
19	VCC1		Positive power supply for internal logic.
60	VCC2		Positive power supply for high-pressure-resistant output port.
22	VSS		GND
32	VP		Negative power supply for VFD drive.

M66005 (FL tube driver)

BLOCK DIAGRAM

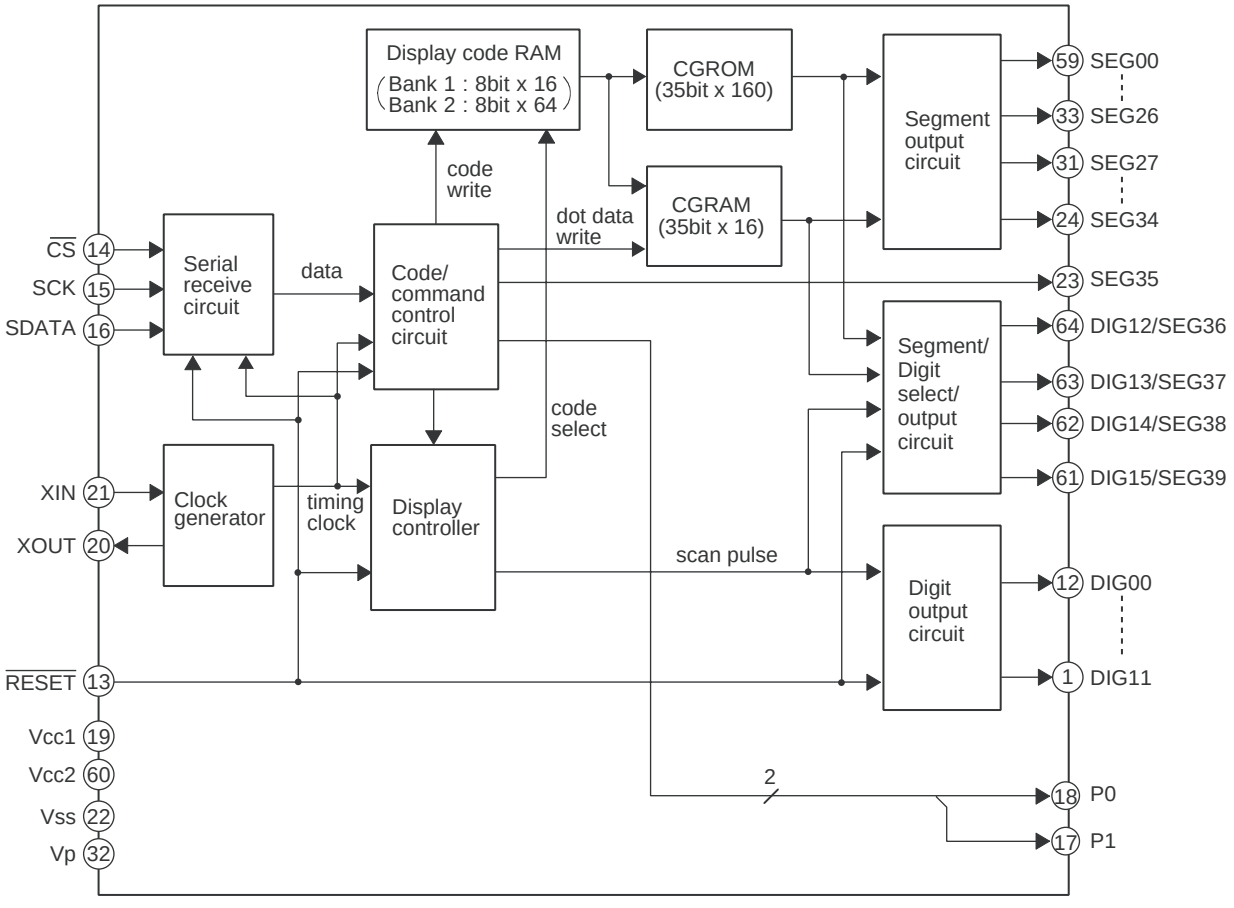

MICROPROCESSOR-CONNECTION DIAGRAM

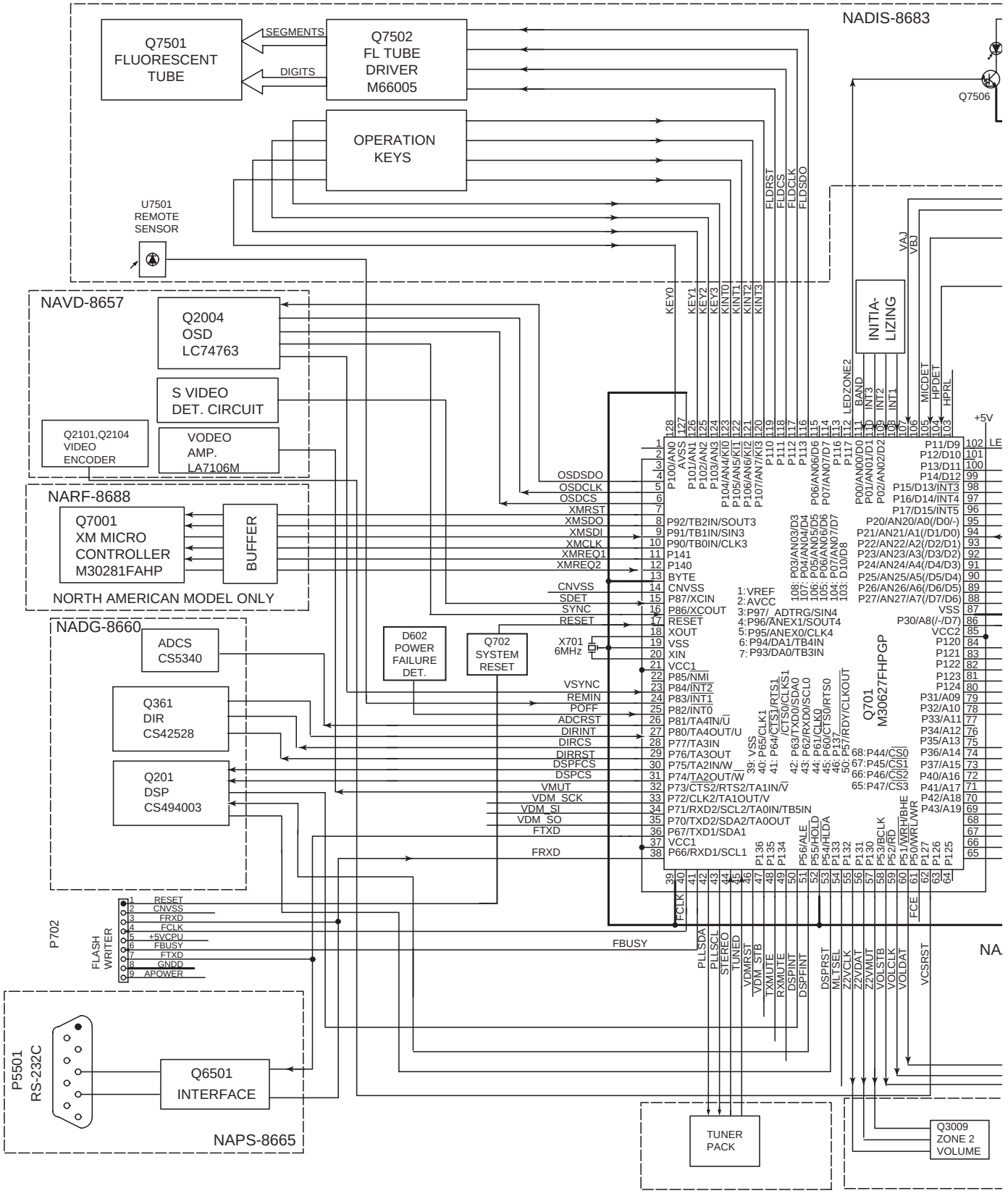

MICROPROCESSOR-CONNECTION DIAGRAM

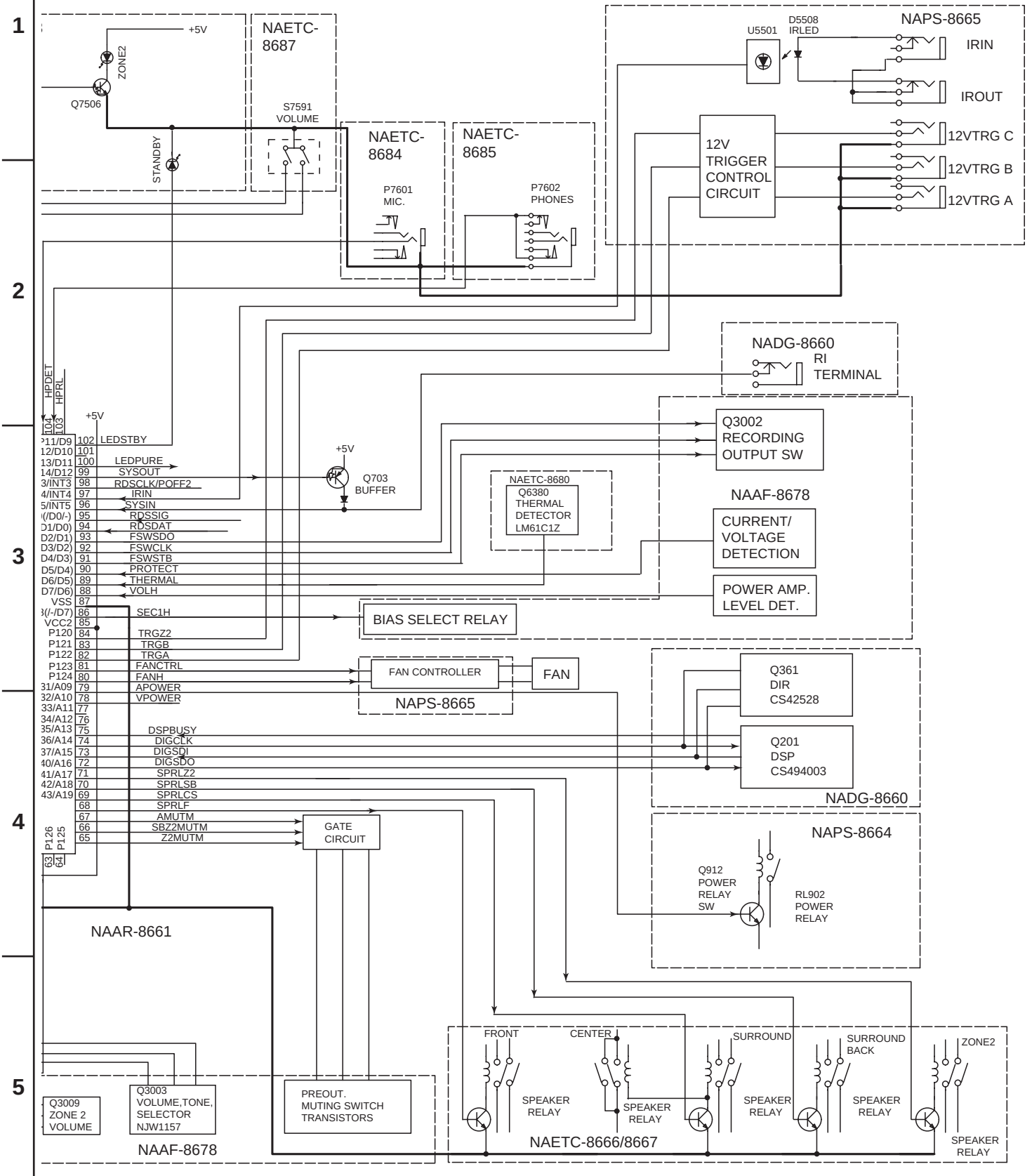

MICROPROCESSOR-CONNECTION DIAGRAM

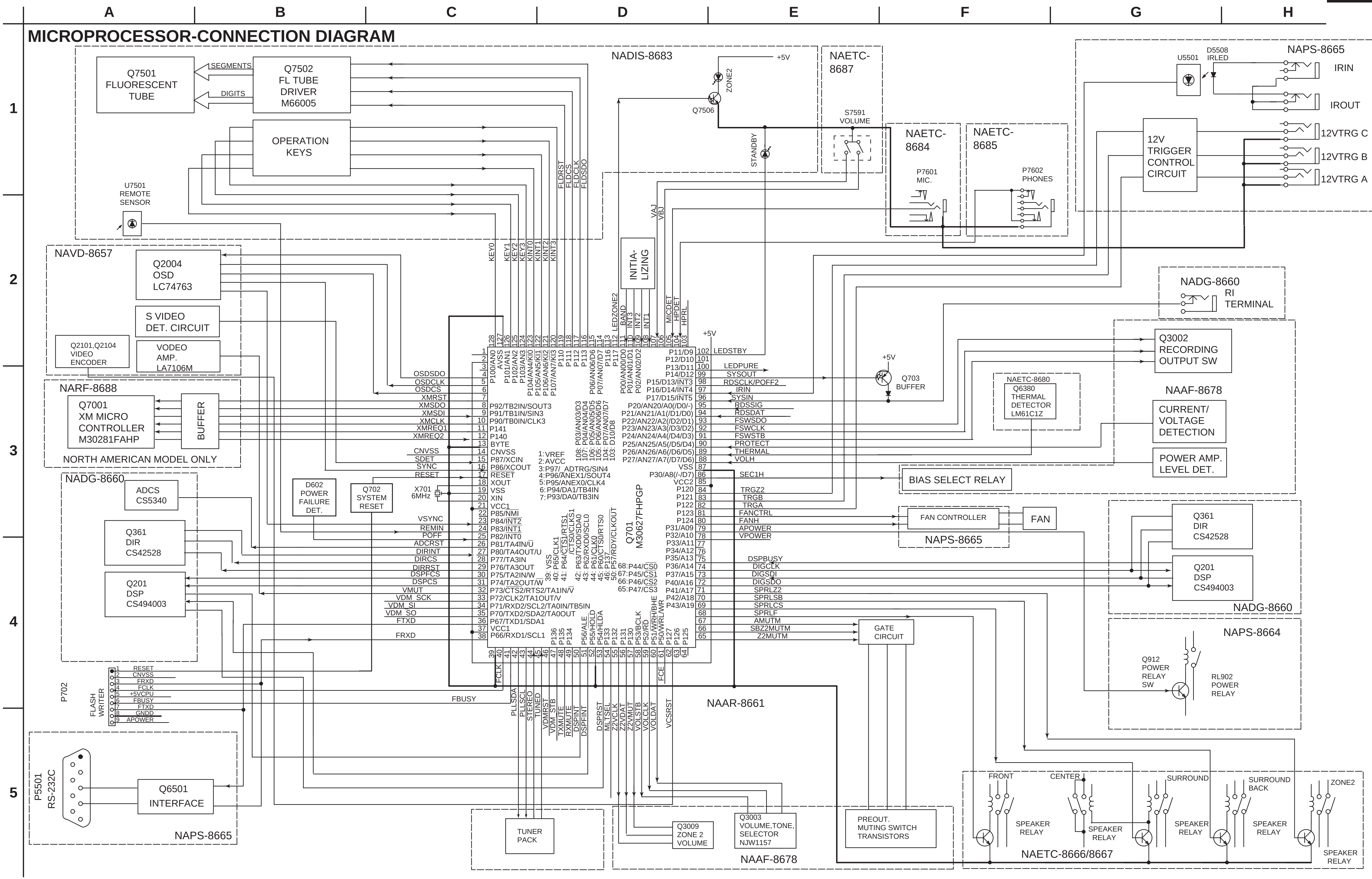

MICROPROCESSOR TERMINAL DESCRIPTIONS

No.	Pin Name	Function	I/O	Act.	Description
1	Vref	Vref			A/D Reference Vltage (Vcc)
2	AVcc	AVcc			A/D Power supply
3	P97/~ADTRG/SIN4		O	H	No connect
4	P96/ANEX1/SOUT4	OSDSDO	O	H	Data output for on-screen display.
5	P95/ANEX0/CLK4	OSDCLK	O	CLK	OSD IC Serial Communication Clock Output.
6	P94/DA1/TB4IN	OSDCS	O	H	OSD IC Chip Select Output
7	P93/DA0/TB3IN	XMRST	O	L	Reset output to XM microprocessor.
8	P92/TB2IN/SOUT3	XMSDO	O	H	Serial data output to XM microprocessor.
9	P91/TB1IN/SIN3	XMSDI	I	H	Serial data input from XM microprocessor.
10	P90/TB0IN/CLK3	XMCLK	O	CLK	Serial clock output to XM microprocessor.
11	P141	~XMREQ1	I	L	Serial data chip request input from XM microprocessor.
12	P140	~XMREQ2	O	H	Serial data chip request output to XM microprocessor.
13	BYTE	BYTE			External bus width select pin. Connects to the ground.
14	CNVSS	CNVss			Processor mode select pin. Connects to the ground via resistor.
15	P87/XCIN	~SDET	I	L	S Video input detection pin.
16	P86/XCOUT	~SYNC	I	L	Sync. detection pin.
17	~RESET	~RESET	I	L	Reset input
18	XOUT	Xout			Ceramic oscillator connection pin.
19	VSS	Vss			Power supply Ground
20	XIN	Xin			Ceramic oscillator connection pin.
21	VCC1	Vcc1			Power supply Vcc.
22	P85/~NMI	~NMI	I	L	Connect the pull-up resistor.
23	P84/~INT2	~VSYNC	I	L	Vertical sync signal detection input.
24	P83/~INT1	~REMIN	I	L	Remote control input.
25	P82/~INT0	POFF	I	H	Power failure detection input pin.
26	P81/TA4IN/~U	~ADCRST	O	L	Multi channel AD Reset output
27	P80/TA4OUT/U	DIRINT	I	H	DIR interrupt request detection pin.
28	P77/TA3IN	~DIRCS	O	L	DIR/CODEC chip select output pin.
29	P76/TA3OUT	~DIRRST	O	L	DIR/CODEC reset output pin.
30	P75/TA2IN/~W	~DSPFCS	O	L	Chip select output pin for DSP AB
31	P74/TA2OUT/W	~DSPCS	O	L	Chip select output pin for DSP C
32	P73/~CTS2/~RTS2/TA1IN/~V	~VMUT	O	L	Video mute control output pin
33	P72/CLK2/TA1OUT/V	VDM_SCK	O	H	Clock output pin to Video microprocessor.
34	P71/RXD2/SCL2/TA0IN/TB5IN	VDM_SI	I	H	Data output pin to Video microprocessor.
35	P70/TXD2/SDA2/TA0OUT	VDM_SO	O	H	Data input pin from Video microprocessor.
36	P67/TXD1/SDA1	FTXD	O	H	Port for writing Flash./RS232 port output.
37	Vcc1				Power supply
38	P66/RXD1/SCL1	FRXD	I	H	Port for writing Flash./RS232 port input.
39	Vss				Ground
40	P65/CLK1	FCLK	O	CLK	Port for writing Flash.
41	P64/~CTS1/~RTS1/~CTS0/CLKS1	FBUSY	O	H	Port for writing Flash.
42	P63/TXD0/SDA0	PLLSDA/VCSDA	I/O	H	Tuner I2C bus data pin/Video Dec/Enc serial communication data output pin
43	P62/RXD0/SCL0	PLLSCL/VCSCL	O	CLK	Tuner I2C bus clock output pin/Video Dec/Enc serial communication clock output pin
44	P61/CLK0	~STEREO	I	L	FM stereo broadcast defection input
45	P60/~CTS0/~RTS0	~TUNED	I	L	Tuner tuned detection input pin
46	P137	~VDMRST	O	H	Reset output pin to video microprocessor.
47	P136	VDM_STB	I	H	Strobe input pin from video microprocessor.
48	P135	TXMUTE	O	H	Muting output pin to video microprocessor.
49	P134	RXMUTE	I	H	Muting input pin from video microprocessor.
50	P57/~RDY/CLKOUT	~DSPINT	I	L	Interrupt request detection pin for DSP C.
51	P56/ALE	~DSPFINT	I	L	Interrupt request detection pin for DSP AB.
52	P55/~HOLD				Connect to the ground.
53	P54/~HLDA	~DSPRST	O	L	DSP reset output pin
54	P133	MLTSEL	O	H	Multi Ch AD and HDMI(I2S) select pin
55	P132	Z2VCLK	O	H	Serial clock output pin for Zone2 Volume IC.
56	P131	Z2VDAT	O	H	Serial data output pin for Zone2 Volume IC.
57	P130	Z2VMUT	O	H	Mute control output pin for Zone2 Volume IC.
58	P53/BCLK	VOLSTB	O	H	Strobe output for Volume
59	P52/~RD	VOLCLK	O	CLK	Serial clock output for Volume
60	P51/~WRH/~BHE	VOLDAT	O	H	Serial data output for Volume
61	P50/~WRL/~WR	~FCE	I	H	Port for writing Flash.
62	P127	~VCRST	O	L	Video Dec/Enc reset control pin
63	P126				
64	P125				

MICROPROCESSOR TERMINAL DESCRIPTIONS

No.	Pin Name	Function	I/O	Act.	Description
65	P47/~CS3	Z2MUT	O	H	Zone2 Out mute control pin
66	P46/~CS2	SBZ2MUT	O	H	Surround back/Zone2 mute control.
67	P45/~CS1	AMUT	O	H	Audio mute control pin
68	P44/~CS0	SPRLF	O	H	Front speaker relay control pin
69	P43/A19	SPRLCS	O	H	Center/Surround back speaker relay control pin.
70	P42/A18	SPRLSB	O	H	Surround back speaker relay control pin.
71	P41/A17	SPRLZ2	O	H	Zone2 speaker relay control pin
72	P40/A16	DIGSDO	O	H	Serial communication data output pin for DIR/CODEC/DSP.
73	P37/A15	DIGSDI	I	H	Serial communication data input pin for DIR/CODEC/DSP.
74	P36/A14	DIGCLK	O	CLK	Serial communication clock output pin for DIR/CODEC/DSP.
75	P35/A13	DSPBUSY	I	H	Busy detection pin for DSP C.
76	P34/A12	DGSW1	O	H	DIGITAL AUDIO MCK select 1. Not used.
77	P33/A11	DGSW2	O	H	DIGITAL AUDIO MCK select 2. Not used.
78	P32/A10	VPOWER	O	H	Power control output for video section
79	P31/A09	APOWER	O	H	Power source control output
80	P124	FANH	O	L	Fan speed control pin. High: Low speed Low: High speed
81	P123	FANCTRL	O	L	Fan operation control pin. High: Stop Low: Rotation
82	P122	TRGA	O	H	12V trigger output A
83	P121	TRGB	O	H	12V trigger output B
84	P120	TRGZ2	O	H	12V trigger output ZONE2
85	VCC2	Vcc2			Power supply
86	P30/A8(/-/D7)	SEC1H	O	H	Voltage select control pin
87	VSS	Vss			Ground
88	P27/AN27/A7(/D7/D6)	VOLH	I	A/D	Signal level detection circuit
89	P26/AN26/A6(/D6/D5)	THERMAL	I	A/D	Thermal detection pin
90	P25/AN25/A5(/D5/D4)	PROTECT	I	H	Protection circuit detection circuit
91	P24/AN24/A4(/D4/D3)	FSWSTB	O	H	Strobe output pin for function switch
92	P23/AN23/A3(/D3/D2)	FSWCLK	O	H	Serial clock output pin for function switch
93	P22/AN22/A2(/D2/D1)	FSWSDO	O	H	Serial data output pin for function switch
94	P21/AN21/A1(/D1/D0)	RDSDAT	I	H	Serial data input pin for RDS
95	P20/AN20/A0(/D0/-)	RDSSIG	I	H	Demodulator data input pin for RDS
96	P17/D15/~INT5	SYSIN	I	H	RI input pin
97	P16/D14/~INT4	~IRIN	I	L	IRIN remote control input pin
98	P15/D13/~INT3	~RDSCLK/POFF2	I	L	Serial clock input pin for RDS
99	P14/D12	~SYSOUT	O	L	RI output pin
100	P13/D11	LEDPURE	O	H	Pure Audio LED control output pin
101	P12/D10				
102	P11/D9	LEDSTBY	O	H	STANDBY LED control pin
103	P10/D8	HPRL	O	H	Headphone relay control pin
104	P07/AN07/D7	HPDET	I	H	Headphone detection input
105	P06/AN06/D6	~MICDET	I	L	Microphone detection input
106	P05/AN05/D5	VOLB	I	CLK	Rotary encoder input for Volume
107	P04/AN04/D4	VOLA	I	CLK	Rotary encoder input for Volume
108	P03/AN03/D3	INIT3	I	A/D	Initializing pin 3
109	P02/AN02/D2	INIT2	I	A/D	Initializing pin 2
110	P01/AN01/D1	INIT1	I	A/D	Initializing pin 1
111	P00/AN00/D0	BAND	I	A/D	Initializing pin for tuner section
112	P117	LEDZONE2	O	H	Zone2 LED control pin
113	P116				
114	P115				
115	P114				
116	P113	FLDSDO	O	H	Serial data output for FL driver
117	P112	FLDCLK	O	H	Serial clock output for FL driver
118	P111	FLDCS	O	H	Chip select output for FL driver
119	P110	~FLDRST	O	L	Reset output for FL driver
120	P107/AN7/~KI3	~KEYINT3	I	L	Key input interrupt 3
121	P106/AN6/~KI2	~KEYINT2	I	L	Key input interrupt 2
122	P105/AN5/~KI1	~KEYINT1	I	L	Key input interrupt 1
123	P104/AN4/~KI0	~KEYINT0	I	L	Key input interrupt 0
124	P103/AN3	KEY3	I	A/D	Key input 3
125	P102/AN2	KEY2	I	A/D	Key input 2
126	P101/AN1	KEY1	I	A/D	Key input 1
127	AVSS	AVss			Ground for A/D
128	P100/AN0	KEY0	I	A/D	Key input 0

ADJUSTMENT AND CONFIRMATION PROCEDURES 1

Idling current adjustment

Before Idling current adjustment, turn the trimming resistors R6040 to R6046 to counter-clockwise.
Connect the DC voltmeter at the sockets P6080 to P6086 via the carbon resistors 100 ohm 1/4W.

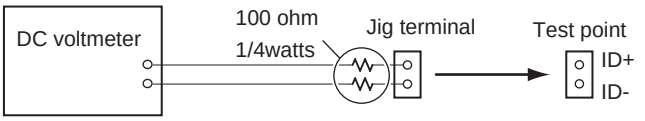

After turn POWER to ON, adjust the trimming resistors R6040, R6041 and R6042 so that the reading of voltmeter becomes 2.5 mV. (Front and center channels)
Adjust the trimming resistors R6043, R6044, R6045 and R6046 so that the reading of voltmeter becomes 1.5 mV. (Surround and surround back channels)
After adjustment, attach the top cover.
Confirm the voltage of points above after about five minutes.

Front and center channels

When less than 9.0 mV, readjust the resistors above so that the voltage becomes 9.0 mV.
When 9.0 mV to 11.0 mV, you are not necessary to adjust.
When more than 11.0 mV, readjust the resistors above so that the voltage becomes 11.0 mV.

Surround and surround back channels

When less than 6.0 mV, readjust the resistors above so that the voltage becomes 6.0 mV.
When 6.0 mV to 8.0 mV, you are not necessary to adjust.
When more than 6.0 mV, readjust the resistors above so that the voltage becomes 8.0 mV.
Note: No load and No signal

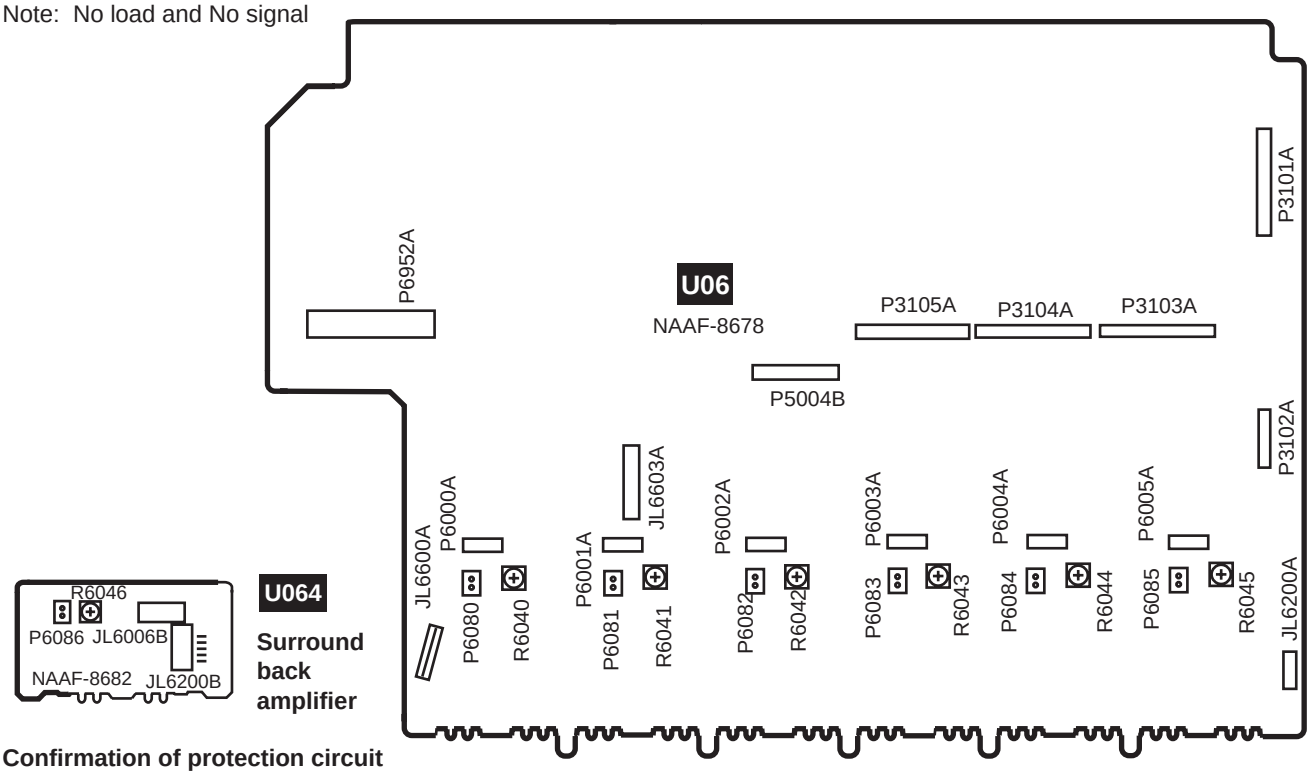

Confirmation of protection circuit

1. Confirmation of operation of speaker relay

Confirm that the speaker relays turn ON approximate 5 seconds after the power switch is turned ON.
Confirm that the speaker relays turn OFF immediately after the power switch is turned OFF.

2. Confirmation of DC detection circuit

Press and hold down CD button, then press STANDBY/ON button to set the unit to "Test- 1".
After "Test- 1" on the FL tube light on, press DVD button to set the unit to "Test- 1-00".
Apply DC 1.5 to 3.5V to the MULTI-CH INPUT terminal with no load.
Confirm that the speaker relay turns OFF.
Apply DC -1.5 to -3.5 V to the MULTI-CH INPUT terminal with no load.
Confirm that the speaker relay turns OFF.
Caution: Don't apply DC voltage more than 1 sec..

ADJUSTMENT AND CONFIRMATION PROCEDURES 2

3. Confirmation of Current detection circuit

Set the unit to "Test- 1-00".
Connect the differentiating circuit and apply the 50Hz square signal to MULTI CHANNEL INPUT terminal of each channel.
Adjust the attenuator or Volume so that the output level becomes 35V p-p.
Confirm that the speaker relay does not turn OFF when a 3.0 ohm load is connected.
Confirm that the speaker relay turns OFF when a 1.0 ohm load is connected.

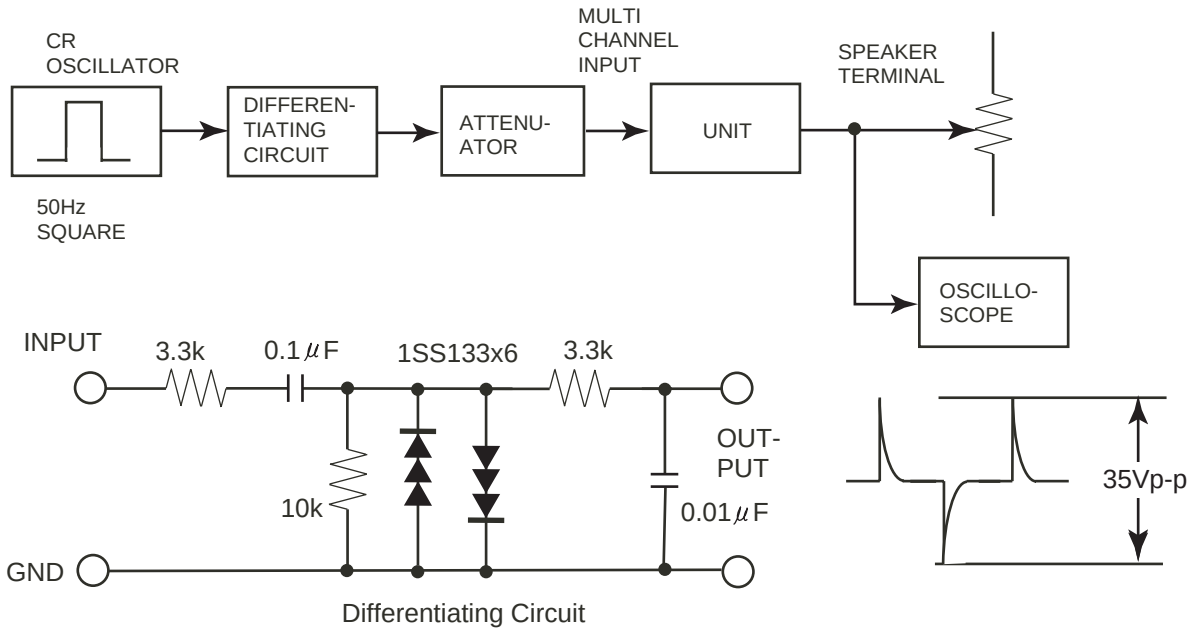

Differentiating Circuit

Test Mode

1. Turn POWER button on.
2. Press and hold down CD button, then press STANDBY/ON button.
3. After "Test - " on the FL tube is displayed, press CD button to set the unit to the test mode of FL tube.
   Note: DVD :Test- 1 VIDEO 1 :Test- 2
   VIDEO 2 :Test- 3 VIDEO 3:Test- 4

Change of item
Tone + ...UP
Tone - .....DOWN

Check of unit by test mode

Voltage detection circuit

Set the unit to "Test- 4-21".
The microprocessor checks the output voltage of all channels automatically
When the output voltage is abnormal, "Protect NG" is displayed on FL tube.
When the voltage of all channels is normal, "Test- 4-35" is displayed on FL tube.
4-21:FL 4-22:FR 4-23:C 4-24:SL 4-25:SR 4-26:SBL 4-27:SBR

Current detection circuit

Set the unit to "Test- 4-35".
Connect the hollow resistor 3 ohm across the speaker terminal.
Check that the speaker relay turn On.
When connect the hollow resistor 1.5 ohm, check that the speaker relay turn Off.
Note: Check the all channels.

ADJUSTMENT AND CONFIRMATION PROCEDURES 3

FL tube

Press and hold down CD button, then press STANDBY/ON button.
After "Test - " on the FL tube is displayed, press CD button to set the unit to the test mode of FL tube.

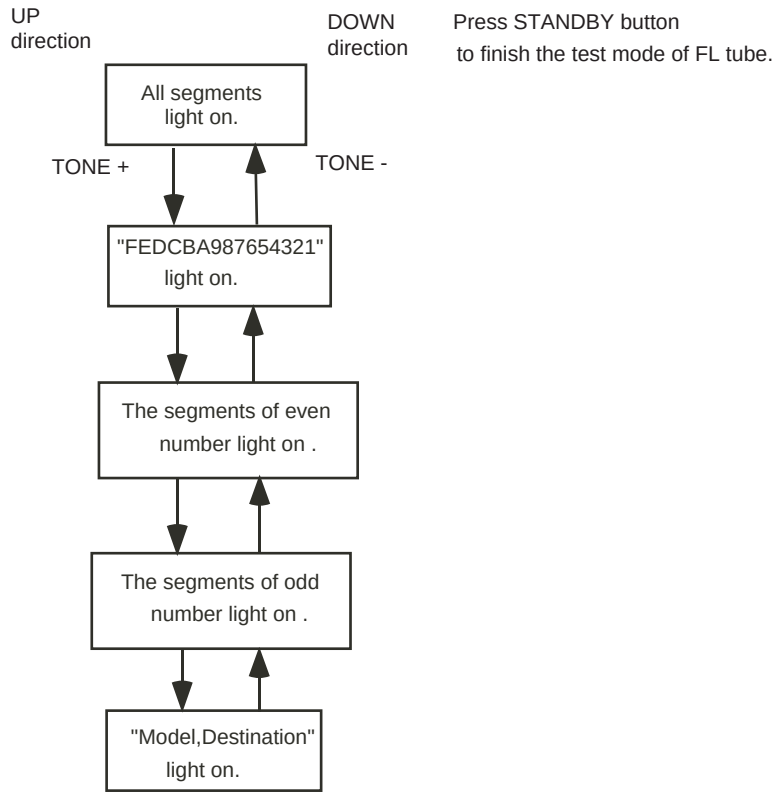

Confirmation of voltage sensor and thermal protector

1. Set the unit to "Test- 4-36 " and "4-37".
   Confirm that FM STEREO is displayed and Speaker relays RL6901 and RL6902 turn Off.
2. Set the unit to "Test- 4-38 ".
   Confirm that FM STEREO is displayed and Speaker relays RL6901 and RL6902 turn Off.

Confirmation of cooling fan

1. Confirm that the fan does not rotate when no input signal.
2. Set the unit to "Test- 4-36 " and "4-37".
   Confirm that the fan rotates at a low speed.
3. Set the unit to "Test- 4-39 ".
   Confirm that the fan rotates at a high speed.

FW UPGRADE

How to check version

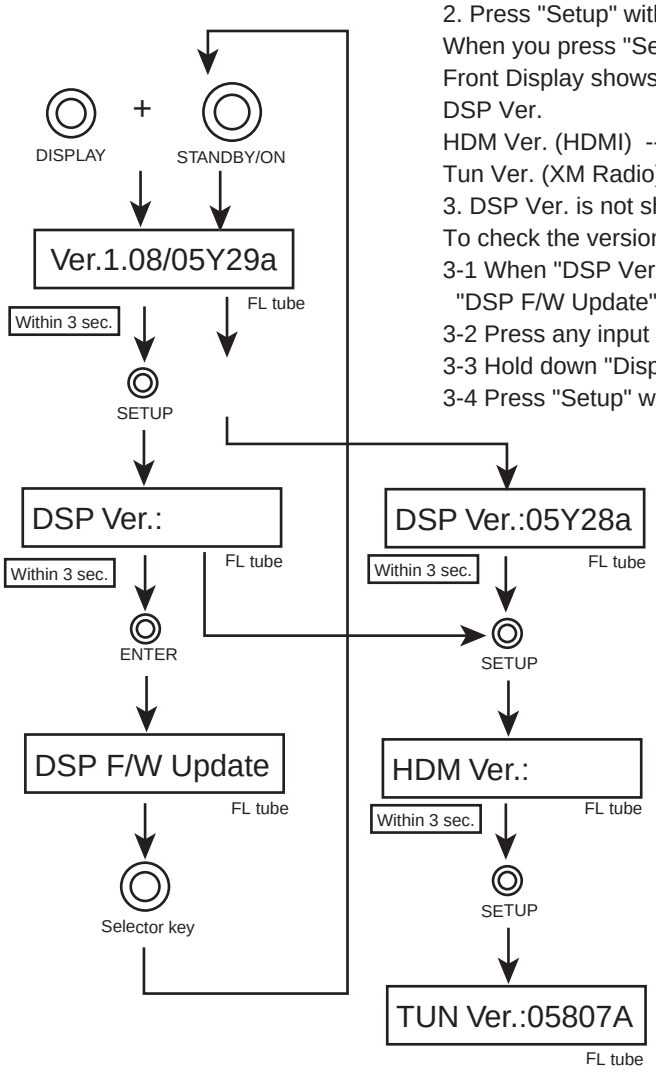

1. Hold down "Display" and then press "Standby" button to show Main version.
2. Press "Setup" within 3 seconds.
When you press "Setup", another version of program is shown.
Front Display shows each version of programs in the following order:
DSP Ver.
HDM Ver. (HDMI) -- blank
Tun Ver. (XM Radio) -- blank except MDD
3. DSP Ver. is not shown easily.
To check the version of DSP FW,
3-1 When "DSP Ver. " is shown, press "Enter" within 3 seconds.
"DSP F/W Update" will be shown.
3-2 Press any input selector button to exit "DSP F/W Update".
3-3 Hold down "Display" and then press "Standby" button to show Main version.
3-4 Press "Setup" within 3 seconds.

Main FW and DSP FW

1) **If both FWs need to be upgraded, DSP FW Upgrade should be done first.**
2) If either of Main Board or DSP Board is replaced, certain combinations of Main-DSP FW versions do not allow you to upgrade DSP FW.
In that case, rewrite a compatible version of Main FW, upgrade DSP FW, and then upgrade Main FW.
DSP: Ver.05723a - Main: Ver. 1.04/05921a,1.06/05X06b,
DSP: Ver. 05Y28a - Main: Ver. 1.08/05Y25a

FW UPGRADE

DSP/Video FW Upgrade

0. Unzip “firmware.zip” and store the unzipped folder & files and "Update.exe" as below.

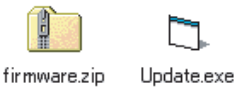

\Updater_SR803\Update.exe
\firmware\SR803\fdist.fdf
\FW803.dcf
\DSP7803_05Y28A.s28
\05X04B_video803.hex

You can name the uppermost folder "\Updater_SR803" as you like.

1. Hold down "Display" and then press "Standby" button to show Main version.
2. Press "Setup" within 3 seconds.
3. Press "Enter" while DSP version is shown to enter Setup mode. "DSP F/W Update" will be shown.
4. Connect your unit and PC with Flashwriter Jig and put the unit into Standby mode.
5. Double-click "Update.exe".

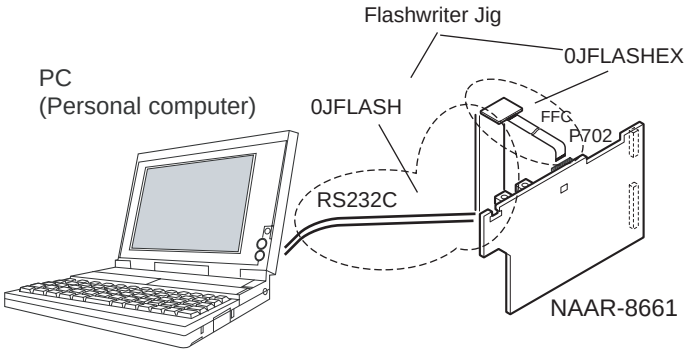

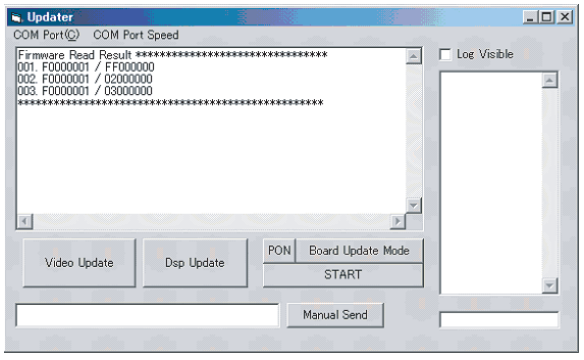

If you get the message like below, FW files are not properly stored. Check the path.

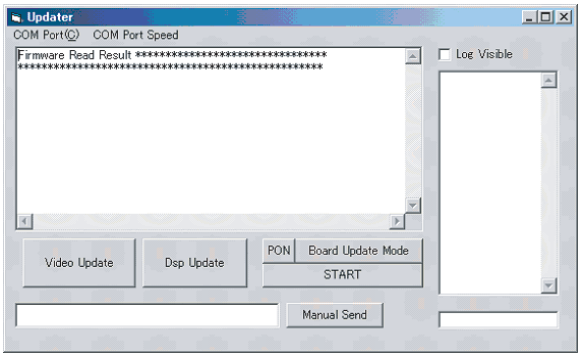

6. Click "DSP Updade" .
DSP

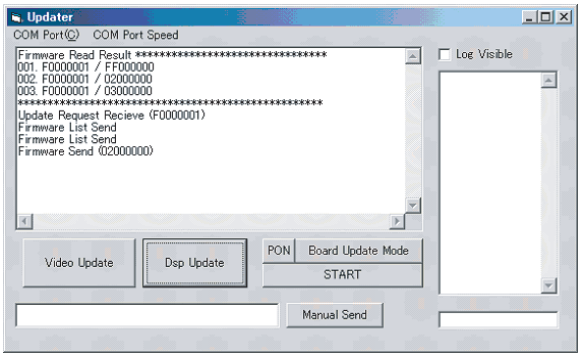

7. Update completes when Front Display stops showing the progress.

Note: Even if you try to check the DSP version, you might not be able to get is due to the wrong combination of DSP and Main.
In this case, check the version after upgrading Main FW.

Main FW Upgrade
Write the latest main program using FlashSta.exe.

PACKING VIEW

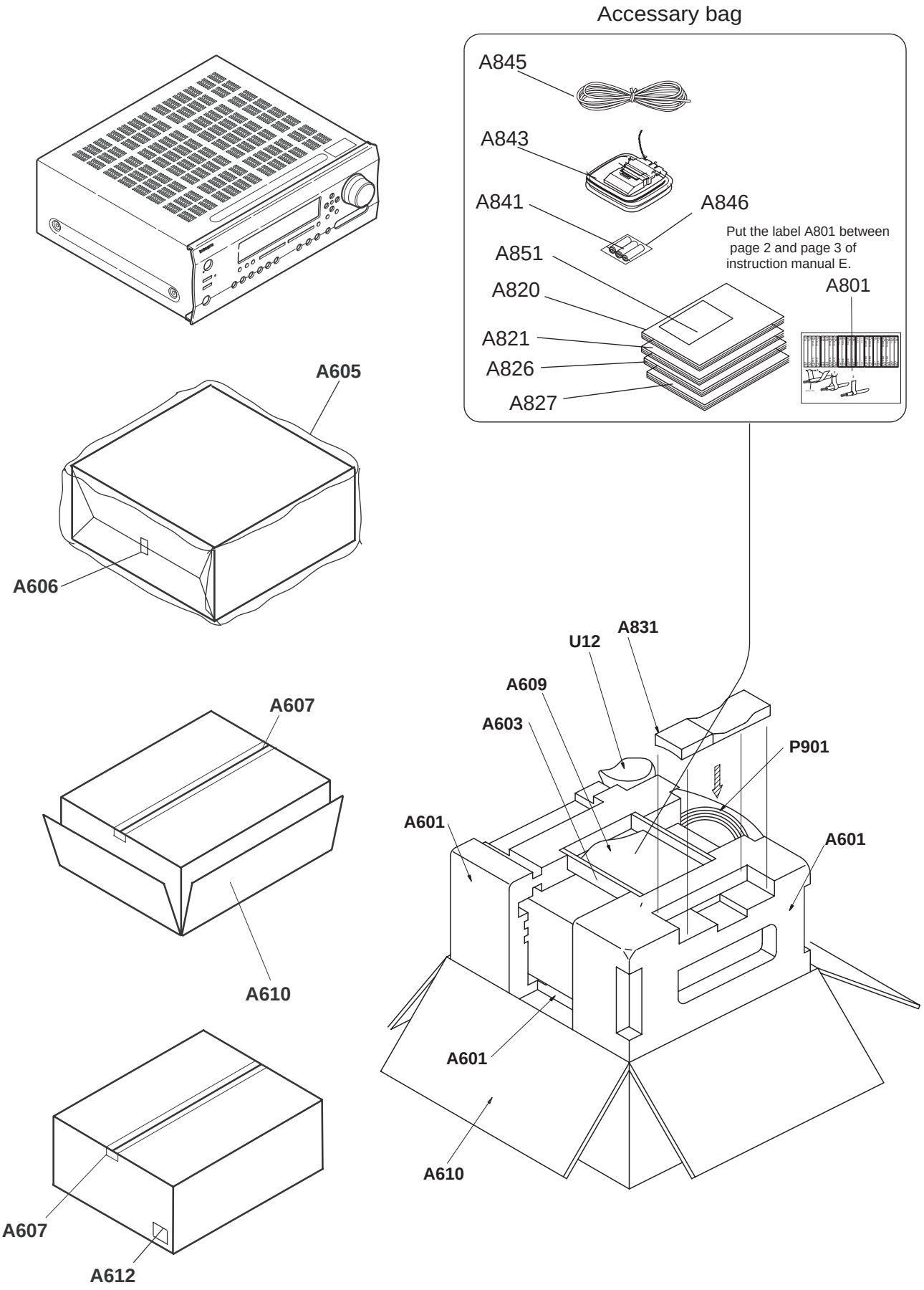

PRINTED CIRCUIT BOARD-PARTS LIST

NOTE: THE COMPONENTS IDENTIFIED BY MARK ! ARE CRITICAL FOR RISK OF FIRE AND ELECTRIC SHOCK. REPLACE ONLY WITH PART NUMBER SPECIFIED.

CAUTION: Replacement for transistor of mark *, if necessary must be made from the same beta group (h_{FE}) as the original type.

NOTE:<D>: USA model only <A>:Australian model only

VIDEO CIRCUIT PC BOARD (NAVD-8657-1D/1H)				
CIRCUIT NO.	**PART NAME**	**DESCRIPTION**	**PART NO.**	**REMARKS**
Q2001,Q2002,Q2003	IC	NJM2595M	22241946R2	
Q2004	IC	LC74763-9836	22241779	
Q2101	IC	ADV7183B	22242202R3	
Q2102	IC(REGULATOR)	TA48033AF(TE16L、NQ) or	22278033DR2T or	
	IC(REGULATOR)	BA33BC0FP	22278033DR2RH	
Q2103	IC(REGULATOR)	TA48018AF(TE16L、NQ) or	22278018DR2T or	
	IC(REGULATOR)	BA18BC0FP	22278018DR2RH	
Q2104	IC	ADV7172	22242155R3	
Q2106,Q2107	IC	LA7106MFP	22241465R2	
Q2111	IC	NJU7313AM	22242211R2	
Q2005,Q2201,Q2202	TR	KTC3875-GR or	2216175R2 or	
	TR	2SC2712-GR	2213145R2	
Q2006,Q2007,Q2012	TR	RN1443 or	2215510R2 or	
Q2013,Q2017,Q2018	TR	KRC286S	2217250R2	
Q2008,Q2009,Q2022	TR	KTA1504-GR or	2216185R2 or	
	TR	2SA1162-GR	2214375R2	
Q2010	TR	KRA102S or	2216220R2 or	
	TR	RN2402 or	2214530R2 or	
	TR	UNR2111	2217110R2	
Q2020,Q2023,Q2024	TR	RN1443 or	2215510R2 or	
Q2025	TR	KRC286S	2217250R2	
Q2051,Q2052,Q2053	TR	KRC101S or	2216330R2 or	
Q2054,Q2105	TR	RN1401	2214460R2	
Q2108,Q2109	TR	2SK3019	2216520R2	
D2001,D2002	C-DIODE	KDS4148U or	223283R2 or	
D2003,D2201	C-DIODE	1SS352 or	223234R2 or	
D2202	C-DIODE	1SS355 or	223269R2 or	
	C-DIODE	MA2J111	223279R2	
X2001	CRYSTAL	HC-49/U0314.318M	3010363	
X2002	CRYSTAL	HC-49/U0317.734M	3010364	<A>
X2101	CRYSTAL	FCX-03-28.6363MHz	3010408R2	
L2001	CHOKE COIL	NCH-1572	231292J056R2	
L2002,L2007	CHOKE COIL	NCH-1471 or	231237K022R2 or	
L2101,L2104,L2105	CHOKE COIL	NCH-1587-022K	233533K022R2	
L2102,L2103	CHOKE COIL	NCH-1477	231237K220R2	
C2001,C2002,C2003	C-CERA C	CK725B1H-102K1	332101025R1	
C2004,C2005,C2007	VR C	CE04W50V-10M(VR)	394681007	
C2006,C2009,C2015	C-CERA C	CK725F1E-104Z1	332161040R1	
C2008,C2013,C2014	VR C	CE04W50V-10M(VR)	394681007	
C2010,C2011,C2012	C-CERA C	CC725CH1H-470J1	342104704R1	
C2016,C2017,C2018	C-CERA C	CC725CH1H-470J1	342104704R1	
C2019,C2020	VR C	CE04W50V-10M(VR)	394681007	
C2021,C2022,C2025	C-CERA C	CK725F1E-104Z1	332161040R1	
C2023,C2024,C2027	VR C	CE04W16V-100M(VR)	394641017	
C2026,C2029,C2030	C-CERA C	CK725F1E-104Z1	332161040R1	
C2028,C2031,C2032	VR C	CE04W16V-100M(VR)	394641017	
C2033,C2052,C2066	C-CERA C	CK725F1E-104Z1	332161040R1	
C2041	C-CERA C	CC725CH1H-100D1	342101002R1	
C2042	C-CERA C	CC725CH1H-180J1	342101804R1	
C2043	C-CERA C	CC725CH1H-180J1	342101804R1	<A>
C2044	C-CERA C	CC725CH1H-080D1	342100802R1	<A>
C2045,C2046,C2047	C-CERA C	CC725CH1H-470J1	342104704R1	
C2048,C2050	C-CERA C	CC725CH1H-470J1	342104704R1	
C2049,C2057	VR C	CE04W50V-1M(VR)	394680107	
C2051,C2073,C2078	VR C	CE04W10V-470M(VR)	394634717	
C2053,C2065,C2177	VR C	CE04W16V-100M(VR)	394641017	
C2054	VR C	CE04W50V-0.33M(VR)	394683397	
C2055	C-CERA C	CK725B1H-122K1	332101225R1	
C2056	TF C	ECQ-B50V-682J	374726824	
C2058	TF C	ECQ-B50V-223J	374722234	

C2059	C-CERA C	CC725CH1H-220J1	342102204R1	
C2060	C-CERA C	CC725CH1H-270J1	342102704R1	
C2061	VR C	CE04W50V-0.47M(VR)	394684797	
C2063	TF C	ECQ-V50V-334J	374723344	
C2067,C2068,C2071	C-CERA C	CK725F1E-104Z1	332161040R1	
C2072,C2090,C2101	C-CERA C	CK725F1E-104Z1	332161040R1	
C2091,C2092	VR C	CE04W50V-10M(VR)	394681007	
C2102,C2136	VR C	CE04W10V-470M(VR)	394634717	
C2103,C2105,C2106	C-CERA C	CK725F1E-104Z1	332161040R1	
C2104,C2112,C2115	CHIP TANTAL	F93-16V-10M or	395541007R2 or	
C2117,C2119,C2164	CHIP TANTAL	TCFGA-1C106M8R	396041007R2	
C2107,C2108,C2109	C-CERA C	CK725F1E-104Z1	332161040R1	
C2110,C2124	C-CERA C	CK725B1H-103K1	332101035R1	
C2111,C2113,C2114	C-CERA C	CK725F1E-104Z1	332161040R1	
C2116,C2118,C2120	C-CERA C	CK725F1E-104Z1	332161040R1	
C2121,C2122	C-CERA C	CK725B1H-102K1	332101025R1	
C2123,C2125,C2126	C-CERA C	CK725F1E-104Z1	332161040R1	
C2128,C2129	C-CERA C	CC725CH1H-080D1	342100802R1	
C2130,C2134,C2137	C-CERA C	CK725F1E-104Z1	332161040R1	
C2131,C2135	C-CERA C	CK725B1H-103K1	332101035R1	
C2132	C-FILM C	ECHU16V-823J	373048234R2	
C2133	C-FILM C	ECHU16V-103J	373041034R2	
C2141,C2142,C2161	C-CERA C	CK725F1E-104Z1	332161040R1	
C2162,C2163,C2178	C-CERA C	CK725F1E-104Z1	332161040R1	
C2171,C2172,C2173	C-CERA C	CK732B1A-105K	337361055R2	
C2174,C2175,C2176	C-CERA C	CK732B1A-105K	337361055R2	
C2179,C2182,C2183	C-CERA C	CK725F1E-104Z1	332161040R1	
C2180,C2181,C2184	VR C	CE04W16V-100M(VR)	394641017	
C2185,C2186	C-CERA C	CK725F1E-104Z1	332161040R1	
C2188,C2189	C-CERA C	CK725F1E-104Z1	332161040R1	
C2201,C2002	C-CERA C	CK725B1H-102K1	332101025R1	
R2001,R2002,R2003	C-CARBON R	RN72K1J-103JE	435031034R1	
R2004,R2005,R2006	C-CARBON R	RN72K1J-750JE	435037504R1	
R2007,R2008,R2009	C-CARBON R	RN72K1J-750JE	435037504R1	
R2010,R2011,R2012	C-CARBON R	RN72K1J-750JE	435037504R1	
R2013,R2014,R2015	C-CARBON R	RN72K1J-750JE	435037504R1	
R2016,R2017,R2018	C-CARBON R	RN72K1J-750JE	435037504R1	
R2019,R2020,R2021	C-CARBON R	RN72K1J-750JE	435037504R1	
R2041,R2042,R2043	C-CARBON R	RN72K1J-222JE	435032224R1	
R2044,R2064	C-CARBON R	RN72K1J-222JE	435032224R1	
R2045,R2065	C-CARBON R	RN72K1J-103JE	435031034R1	
R2046,R2055,R2101	C-CARBON R	RN72K1J-102JE	435031024R1	
R2047,R2057	C-CARBON R	RN72K1J-473JE	435034734R1	
R2048,R2053	C-CARBON R	RN72K1J-682JE	435036824R1	
R2049	C-CARBON R	RN72K1J-332JE	435033324R1	
R2050,R2058,R2059	C-CARBON R	RN72K1J-221JE	435032214R1	
R2051	C-CARBON R	RN72K1J-824JE	435038244R1	
R2052	C-CARBON R	RN72K1J-152JE	435031524R1	
R2054,R2094,R2095	C-CARBON R	RN72K1J-121JE	435031214R1	
R2056,R2061	C-CARBON R	RN72K1J-272JE	435032724R1	
R2060	C-CARBON R	RN72K1J-123JE	435031234R1	
R2062	C-CARBON R	RN72K1J-333JE	435033334R1	
R2063	C-CARBON R	RN72K1J-680JE	435036804R1	
R2066,R2067	C-CARBON R	RN72K1J-221JE	435032214R1	
R2070	C-CARBON R	RN72K1J-220JE	435032204R1	
R2071,R2072,R2073	C-CARBON R	RN72K1J-104JE	435031044R1	
R2074,R2075,R2076	C-CARBON R	RN72K1J-104JE	435031044R1	
R2077,R2078,R2079	C-CARBON R	RN72K1J-104JE	435031044R1	
R2080,R2081,R2082	C-CARBON R	RN72K1J-104JE	435031044R1	
R2083,R2084,R2085	C-CARBON R	RN72K1J-104JE	435031044R1	
R2086,R2162,R2164	C-CARBON R	RN72K1J-104JE	435031044R1	
R2087	C-CARBON R	RN72K1J-331JE	435033314R1	
R2088	C-CARBON R	RN72K1J-750JE	435037504R1	
R2089	C-CARBON R	RN72K1J-082JE	435030824R1	
R2090	C-CARBON R	RN72K1J-022JE	435030224R1	
R2091,R2096	C-CARBON R	RN72K1J-103JE	435031034R1	
R2092,R2097	C-CARBON R	RN72K1J-471JE	435034714R1	
R2093,R2098	C-CARBON R	RN72K1J-820JE	435038204R1	
R2102,R2103,R2104	C-CARBON R	RN72K1J-102JE	435031024R1	
R2105,R2106,R2107	C-CARBON R	RN72K1J-102JE	435031024R1	
R2108,R2115	C-CARBON R	RN72K1J-102JE	435031024R1	
R2109,R2111,R2112	C-CARBON R	RN72K1J-101JE	435031014R1	

R2110,R2113	C-CARBON R	RN72K1J-222JE	435032224R1	
R2114,R2130,R2131	C-CARBON R	RN72K1J-472JE	435034724R1	
R2116	C-CARBON R	RN72K1J-681JE	435036814R1	
R2121,R2122,R2123	C-CARBON R	RN72K1J-330JE	435033304R1	
R2124,R2125,R2126	C-CARBON R	RN72K1J-330JE	435033304R1	
R2127,R2128,R2129	C-CARBON R	RN72K1J-330JE	435033304R1	
R2132,R2133,R2143	C-CARBON R	RN72K1J-101JE	435031014R1	
R2134,R2135	C-CARBON R	RN72K1J-122JE	435031224R1	
R2141,R2142	C-CARBON R	RN72K1J-122JE	435031224R1	
R2144	C-CARBON R	RN72K1J-330JE	435033304R1	
R2145	C-CARBON R	RN72K1J-472JE	435034724R1	
R2161,R2163,R2165	C-CARBON R	RN72K1J-101JE	435031014R1	
R2166,R2168	C-CARBON R	RN72K1J-104JE	435031044R1	
R2167,R2169,R2171	C-CARBON R	RN72K1J-101JE	435031014R1	
R2170,R2172	C-CARBON R	RN72K1J-104JE	435031044R1	
R2173,R2174	C-CARBON R	RN72K1J-101JE	435031014R1	
R2175	C-CARBON R	RN72K1J-180JE	435031804R1	
R2176,R2177,R2178	C-CARBON R	RN72K1J-820JE	435038204R1	
R2179,R2180	C-CARBON R	RN72K1J-391JE	435033914R1	
R2181,R2182,R2183	C-CARBON R	RN72K1J-820JE	435038204R1	
R2184,R2185,R2186	C-CARBON R	RN72K1J-820JE	435038204R1	
R2187,R2188,R2189	C-CARBON R	RN72K1J-680JE	435036804R1	
R2190,R2191,R2192	C-CARBON R	RN72K1J-680JE	435036804R1	
R2201,R2202,R2203	C-CARBON R	RN72K1J-475JE	435034754R1	
R2204,R2205	C-CARBON R	RN72K1J-102JE	435031024R1	
R2207,R2208,R2209	C-CARBON R	RN72K1J-000JE	435030004R1	
RL2201,RL2202	RELAY	NPL-2P1A-DC4.5-169 or	25065645 or	
RL2203,RL2204	RELAY	NRL-2P2A-DC4.5-173	25065658	
RL2205	RELAY	NPL-2P1A-DC4.5-169 or	25065645 or	
	RELAY	NRL-2P2A-DC4.5-173	25065658	
P2001,P2002	PIN JACK	NPJ-10PDSY628 or	25045849 or	
P2003	PIN JACK	NPJ-10PDBY481	25045684	
P2007	PIN JACK	NPJ-5PDSY629 or	25045850 or	
	PIN JACK	NPJ-5PDBY482	25045685	
P2201	PIN JACK	NPJ-9PDGLR630 or	25045851 or	
	PIN JACK	NPJ-9PDGLR520	25045732	
P2202	PIN JACK	NPJ-3PDGLR631	25045852	
JL2006A	WIRE HOL	NSCT-5P896	25051109	
P2004A,P2005A	SOCKET	NSCT-13P2193	25052296	
DSP CIRCUIT PC BOARD (NADG-8660-1R/1T)				
MAIN MICROPROCESSOR PC BOARD (NAAR-8661-1R/1T)				
CIRCUIT NO.	**PART NAME**	**DESCRIPTION**	**PART NO.**	**REMARKS**
Q121	IC	74HCU04F or	222740046R2 or	
	IC	SN74HCU04NSR	222740046R2TI	
Q131	IC	TC7WU04FU	22240935R2	
Q191	IC(REGULATOR)	TA48033AF(TE16L、NQ) or	22278033DR2T or	
	IC(REGULATOR)	BA33BC0FP	22278033DR2RH	
Q192	IC(REGULATOR)	TA48025AF(TE16L、NQ) or	22278025DR2TO or	
	IC	BA25BCOFP	22241835R2	
Q193	IC(REGULATOR)	TA4805AF(TE16L、NQ) or	22278005DR2TO or	
	IC(REGULATOR)	MPC2905AT or	22278005DR2NE or	
	IC(REGULATOR)	NJM2391DL1-05	22278005DR2JR	
Q201	IC	CS494003CQZ	22242039R3	
Q211	IC	EN29LV040-70TCP or	W0037R301566M100 or	
	IC	MX26LV040-70	222W0037R3	NSP
Q285	IC	IC42S16100 or	22242123R2 or	
	IC	M12L16161A-7TG	22242278R3	
Q301,Q302,Q303	IC	NE5532APSR	22242283R2	
Q331,Q341,Q351	IC	CS5340-CZ	22242187R2	
Q361	IC	CS42528-CQZR-D	22242275R2	
Q400,Q401,Q402	IC	NE5532APSR	22242283R2	
Q403,Q410,Q411	IC	NE5532APSR	22242283R2	
Q412,Q413,Q420	IC	NE5532APSR	22242283R2	
Q421,Q422,Q423	IC	NE5532APSR	22242283R2	
Q430,Q431,Q432	IC	NE5532APSR	22242283R2	
Q433	IC	NE5532APSR	22242283R2	
Q701	IC	M30627FHPGP U5C	W0025R301550M106	
Q710	IC	XC6213B332MR	22242277R2	
Q711	IC	TC74VHCT541AFT or	22274541GR2TO or	
	IC	SN74AHCT541PWR	22274541GR2TI	
Q713	IC	TC74VHC541FT(EKJ) or	22274541E1R2TO or	
	IC	TC74VHC541FT or	22274541ER2TO or	

	IC	SN74AHC541PWR	22274541IR2TI	
Q714	IC	S-812C56AUA-C3K	22242207R2	
Q702,Q705,Q707	TR	KRC104S or	2216210R2 or	
Q709	TR	RN1404	2214490R2	
Q703,Q704,Q706	TR	KRA102S or	2216220R2 or	
Q708	TR	RN2402	2214530R2	
U101,U102,U103	PHT CP	GP1FAV51RKF5 or	24120129 or	
U104	PHT CP	TORX177L	24120127	
U105	PHT CP	GP1FAV51TKBF or	24120132 or	
	PHT CP	TOTX177L	24120126	
D601,D602,D605,D6	C-DIODE	KDS4148U or	223283R2 or	
06,D607,D611,D612,	C-DIODE	1SS352 or	223234R2 or	
D613	C-DIODE	1SS355 or	223269R2 or	
	C-DIODE	MA2J111	223279R2	
D604	ZENER D	UDZS5.1B or	224550510R2 or	
	ZENER D	HZU5.1B	224660514R2	
D609,D610,D614	DIODE	RL1N4003 or	22380260 or	
	DIODE	GP104003E	22380035	
X131	CRYSTAL	HC-49U0312.288MHz	3010414	
X701	CERA LOCK	CSTCR6M0055-R0	3010397R2	
L101,L102,L131	CHOKE COIL	NCH-1471	231237K022R2	
L121,L122,L331	CHOKE COIL	NCH-1479	231237K470R2	
L133	EMIFIL	BK1608HS102-T	230955R2	
L204	EMIFIL	BK1608LL241-T	230959R1	
L191,L192	CHOKE COIL	NCH-1473	231237M047R2	
L201,L202,L203	CHOKE COIL	NCH-1471	231237K022R2	
L281,L285,L332	CHOKE COIL	NCH-1471	231237K022R2	
L341,L351	CHOKE COIL	NCH-1479	231237K470R2	
L342,L352,L361	CHOKE COIL	NCH-1471	231237K022R2	
L362,L366,L367	EMIFIL	BK1608LM182-T	230958R1	
L363,L364,L365	CHOKE COIL	NCH-1471	231237K022R2	
L601,L602	CHOKE COIL	NCH-1471	231237K022R2	
L603,L604	CHOKE COIL	NCH-1471	231237K022R2	
C101,C102,C218	C-CERA C	CC725CH1H-101J1	342101014R1	
C103,C104,C108	C-CERA C	CK725B1C-104K1	332121045R1	
C105,C106,C107	C-CERA C	CC725CH1H-080D1	342100802R1	
C111,C112,C113	C-CERA C	CK725F1E-104Z1	332161040R1	
C114,C115,C122	C-CERA C	CK725F1E-104Z1	332161040R1	
C116,C121	VR C	CE04W16V-100M(VR)	394641017	
C125,C146	C-CERA C	CK725B1H-102K1	332101025R1	
C131,C134,C201	C-CERA C	CK725F1E-104Z1	332161040R1	
C132,C133	C-CERA C	CC725CH1H-120J1	342101204R1	
C191,C193	VR C	CE04W6.3V-470M(VR)	394624717	
C192,C194,C196	VR C	CE04W16V-100M(VR)	394641017	
C195	VX C	CE04W16V-1000M(VR)	394641027	
C202,C203,C204	C-CERA C	CK725F1E-104Z1	332161040R1	
C205,C206,C208	C-CERA C	CK725F1E-104Z1	332161040R1	
C207,C210,C211	VR C	CE04W16V-100M(VR)	394641017	
C209,C212,C216	C-CERA C	CK725F1E-104Z1	332161040R1	
C213	CHIP TANTAL	CS772SB1C-2.2M	395640227R2	
C214	C SERA C	CC725CH1H-122J1	342101224R1	
C215	C-CERA C	CC725CH1H-680J1	342106804R1	
C217,C282,C286	C-CERA C	CK725F1E-104Z1	332161040R1	
C281,C285,C331	VR C	CE04W16V-100M(VR)	394641017	
C287,C288,C289	C-CERA C	CK725F1E-104Z1	332161040R1	
C290,C291,C332	C-CERA C	CK725F1E-104Z1	332161040R1	
C301,C304	VX C	CE04W50V-10M(VX)	393381007	
C302,C306,C312	C-CERA C	CC725CH1H-101J1	342101014R1	
C303,C307,C313	C-CERA C	CC732CH1H-222J	347342224R2	
C305,C308,C311	VX C	CE04W50V-10M(VX)	393381007	
C314,C315,C318	VX C	CE04W50V-10M(VX)	393381007	
C316,C322,C326	C-CERA C	CC725CH1H-101J1	342101014R1	
C317,C323,C327	C-CERA C	CC732CH1H-222J	347342224R2	
C321,C324,C325	VX C	CE04W50V-10M(VX)	393381007	
C328,C334,C344	VX C	CE04W50V-10M(VX)	393381007	
C333,C335,C337	C-CERA C	CK725F1E-104Z1	332161040R1	
C336,C338,C341	VR C	CE04W16V-100M(VR)	394641017	
C339,C342,C343	C-CERA C	CK725F1E-104Z1	332161040R1	
C345,C347,C349	C-CERA C	CK725F1E-104Z1	332161040R1	
C346,C348,C351	VR C	CE04W16V-100M(VR)	394641017	
C352,C353,C355	C-CERA C	CK725F1E-104Z1	332161040R1	
C354	VX C	CE04W50V-10M(VX)	393381007	

C356,C358,C367	VR C	CE04W16V-100M(VR)	394641017	
C357,C359,C362	C-CERA C	CK725F1E-104Z1	332161040R1	
C361,C369	VX C	CE04W6.3V-220M(VX)	393322217	
C363,C366,C368	C-CERA C	CK725F1E-104Z1	332161040R1	
C365	RFS C	CE04W25V-47M(RFS)	395954707	
C370	C-CERA C	CK725B1H-222K1	332102225R1	
C371	C-CERA C	CK725B1H-473K1	332104735R1	
C372,C383,C384	C-CERA C	CK725F1E-104Z1	332161040R1	
C373,C374,C375	C-CERA C	CC725CH1H-330J1	342103304R1	
C376,C377,C378	C-CERA C	CC725CH1H-330J1	342103304R1	
C379	C-CERA C	CC725CH1H-330J1	342103304R1	
C380,C382	VX C	CE04W6.3V-220M(VX)	393322217	
C381	C-CARBON R	RN72K1J-000JE	435030004R1	
C395,C396	TF C	ECQ-B50V-222J	374722224	
C400,C401,C402	TF C	ECQ-B50V-471J	374724714	
C403,C404,C405	TF C	ECQ-B50V-471J	374724714	
C406,C440,C441	TF C	ECQ-B50V-471J	374724714	
C407	TF C	ECQ-V50V-333J	374723334	
C410,C411,C412	TF C	ECQ-B50V-121K	374721215	
C413,C414,C415	TF C	ECQ-B50V-121K	374721215	
C416,C420,C421	TF C	ECQ-B50V-121K	374721215	
C417,C427	TF C	ECQ-B50V-153J	374721534	
C422,C423,C424	TF C	ECQ-B50V-121K	374721215	
C425,C426	TF C	ECQ-B50V-121K	374721215	
C430,C431,C432	TF C	ECQ-B50V-122J	374721224	
C433,C434,C435	TF C	ECQ-B50V-122J	374721224	
C436,C437	TF C	ECQ-B50V-122J	374721224	
C442,C443,C444	TF C	ECQ-B50V-471J	374724714	
C445,C446,C447	TF C	ECQ-B50V-471J	374724714	
C555,C556	VX C	CE04W25V-220M(VX)	393352217	
C557,C558	VX C	CE04W25V-220M(VX)	393352217	
C601,C602,C603	C-CERA C	CK725F1E-104Z1	332161040R1	
C604,C605	C-CERA C	CK725F1E-104Z1	332161040R1	
C606,C607	C-CERA C	CK725F1E-104Z1	332161040R1	
C609,C610,C611	C-CERA C	CC725CH1H-102J1	342101024R1	
C612,C613,C614	C-CERA C	CC725CH1H-102J1	342101024R1	
C615,C616,C619	C-CERA C	CC725CH1H-102J1	342101024R1	
C617	VR C	CE04W50V-4.7M(VR)	394680477	
C618,C621,C624	C-CERA C	CK725F1E-104Z1	332161040R1	
C620	C-CERA C	CC725CH1H-102J1	342101024R1	
C625,C626	C-CERA C	CC725CH1H-101J1	342101014R1	
C650,C651	VX C	CE04W50V-10M(VX)	393381007	
C701,C717	C-CERA C	CK725F1E-104Z1	332161040R1	
C702,C716	VR C	CE04W16V-100M(VR)	394641017	
C705	EDL C	DX-5R5L224	3000079	
C709,C711,C713	C-CERA C	CK732B1C-474K	337394745R1	
C710,C712,C714	VR C	CE04W50V-1M(VR)	394680107	
C715	C-CERA C	CK732B1C-474K	337394745R1	
C719,C723	C-CERA C	CK725F1E-104Z1	332161040R1	
C724	VR C	CE04W16V-100M(VR)	394641017	
R101,R102	C-CARBON R	RN72K1J-750JE	435037504R1	
R103,R104	C-CARBON R	RN72K1J-100JE	435031004R1	
R105,R106,R110	C-CARBON R	RN72K1J-224JE	435032244R1	
R107,R108,R109	C-CARBON R	RN72K1J-103JE	435031034R1	
R111,R112,R113	C-CARBON R	RN72K1J-221JE	435032214R1	
R114,R115	C-CARBON R	RN72K1J-221JE	435032214R1	
R125,R204,R206	C-CARBON R	RN72K1J-331JE	435033314R1	
R131,R617	C-CARBON R	RN72K1J-105JE	435031054R1	
R133	C-CARBON R	RN72K1J-681JE	435036814R1	
R135,R151,R281	C-CARBON R	RN72K1J-000JE	435030004R1	
R149	C-CARBON R	RN72K1J-470JE	435034704R1	
R176,R177,R178	C-CARBON R	RN72K1J-000JE	435030004R1	
R179,R180,R181	C-CARBON R	RN72K1J-000JE	435030004R1	
R193	METAL R	RNU1WCJ-4.7	453630474	
R201,R202,R203	C-CARBON R	RN72K1J-332JE	435033324R1	
R205,R209,R210	C-CARBON R	RN72K1J-103JE	435031034R1	
R207,R214,R233	C-CARBON R	RN72K1J-470JE	435034704R1	
R208,R211,R212	C-CARBON R	RN72K1J-332JE	435033324R1	
R213,R217,R218	C-CARBON R	RN72K1J-103JE	435031034R1	
R215,R216,R220	C-CARBON R	RN72K1J-332JE	435033324R1	
R219,R221,R224	C-CARBON R	RN72K1J-103JE	435031034R1	
R222,R223,R276	C-CARBON R	RN72K1J-332JE	435033324R1	

R225,R226,R227	C-CARBON R	RN72K1J-103JE	435031034R1	
R228,R229,R230	C-CARBON R	RN72K1J-103JE	435031034R1	
R231,R232,R240	C-CARBON R	RN72K1J-103JE	435031034R1	
R234,R235,R236	C-CARBON R	RN72K1J-470JE	435034704R1	
R237,R238,R239	C-CARBON R	RN72K1J-470JE	435034704R1	
R241,R242,R245	C-CARBON R	RN72K1J-103JE	435031034R1	
R243,R244,R247	C-CARBON R	RN72K1J-470JE	435034704R1	
R246,R248,R255	C-CARBON R	RN72K1J-103JE	435031034R1	
R249,R250,R251	C-CARBON R	RN72K1J-470JE	435034704R1	
R252,R253,R254	C-CARBON R	RN72K1J-470JE	435034704R1	
R256,R257,R261	C-CARBON R	RN72K1J-103JE	435031034R1	
R258,R259,R260	C-CARBON R	RN72K1J-470JE	435034704R1	
R262,R266,R267	C-CARBON R	RN72K1J-103JE	435031034R1	
R263,R270,R271	C-CARBON R	RN72K1J-331JE	435033314R1	
R264,R371,R732	C-CARBON R	RN72K1J-272JE	435032724R1	
R265,R268,R269	C-CARBON R	RN72K1J-470JE	435034704R1	
R272,R304,R305	C-CARBON R	RN72K1J-103JE	435031034R1	
R273,R274,R275	C-CARBON R	RN72K1J-331JE	435033314R1	
R277	C-CARBON R	RN72K1J-221JE	435032214R1	
R278,R301,R306	C-CARBON R	RN72K1J-331JE	435033314R1	
R285,R331,R341	C-CARBON R	RN72K1J-470JE	435034704R1	
R291,R292,R293	C-CARBON R	RN72K1J-104JE	435031044R1	
R294,R295,R296	C-CARBON R	RN72K1J-104JE	435031044R1	
R302,R307,R312	C-CARBON R	RN72K1J-122JE	435031224R1	
R303,R308,R313	C-CARBON R	RN72K1J-152JE	435031524R1	
R309,R310,R314	C-CARBON R	RN72K1J-103JE	435031034R1	
R311,R316,R321	C-CARBON R	RN72K1J-331JE	435033314R1	
R315,R319,R320	C-CARBON R	RN72K1J-103JE	435031034R1	
R317,R322,R327	C-CARBON R	RN72K1J-122JE	435031224R1	
R318,R323,R328	C-CARBON R	RN72K1J-152JE	435031524R1	
R324,R325,R329	C-CARBON R	RN72K1J-103JE	435031034R1	
R326,R332,R334	C-CARBON R	RN72K1J-331JE	435033314R1	
R330,R333,R343	C-CARBON R	RN72K1J-103JE	435031034R1	
R335,R337,R342	C-CARBON R	RN72K1J-331JE	435033314R1	
R344,R345,R347	C-CARBON R	RN72K1J-331JE	435033314R1	
R351,R361,R362	C-CARBON R	RN72K1J-470JE	435034704R1	
R352,R354,R355	C-CARBON R	RN72K1J-331JE	435033314R1	
R353,R420,R421	C-CARBON R	RN72K1J-103JE	435031034R1	
R357,R372,R373	C-CARBON R	RN72K1J-331JE	435033314R1	
R363,R364,R365	C-CARBON R	RN72K1J-221JE	435032214R1	
R366,R367,R368	C-CARBON R	RN72K1J-221JE	435032214R1	
R374,R375,R376	C-CARBON R	RN72K1J-331JE	435033314R1	
R377,R378	C-CARBON R	RN72K1J-331JE	435033314R1	
R380	C-CARBON R	RN72K1J-331JE	435033314R1	
R381,R382,R383	C-CARBON R	RN72K1J-470JE	435034704R1	
R384,R385,R386	C-CARBON R	RN72K1J-470JE	435034704R1	
R387,R765,R785	C-CARBON R	RN72K1J-470JE	435034704R1	
R391,R392	C-CARBON R	RN72K1J-560JE	435035604R1	
R393,R394	C-CARBON R	RN72K1J-560JE	435035604R1	
R395,R396	C-CARBON R	RN72K1J-392JE	435033924R1	
R400,R401,R402	C-CARBON R	RN72K1J-332JE	435033324R1	
R403,R404,R405	C-CARBON R	RN72K1J-332JE	435033324R1	
R406,R407,R410	C-CARBON R	RN72K1J-332JE	435033324R1	
R411,R412,R413	C-CARBON R	RN72K1J-332JE	435033324R1	
R414,R415,R416	C-CARBON R	RN72K1J-332JE	435033324R1	
R417,R447,R457	C-CARBON R	RN72K1J-332JE	435033324R1	
R422,R423,R424	C-CARBON R	RN72K1J-103JE	435031034R1	
R425,R426,R427	C-CARBON R	RN72K1J-103JE	435031034R1	
R430,R431,R432	C-CARBON R	RN72K1J-103JE	435031034R1	
R433,R434,R435	C-CARBON R	RN72K1J-103JE	435031034R1	
R436,R437,R460	C-CARBON R	RN72K1J-103JE	435031034R1	
R440,R441,R442	C-CARBON R	RN72K1J-181JE	435031814R1	
R443,R444,R445	C-CARBON R	RN72K1J-181JE	435031814R1	
R446,R450,R451	C-CARBON R	RN72K1J-181JE	435031814R1	
R452,R453,R454	C-CARBON R	RN72K1J-181JE	435031814R1	
R455,R456	C-CARBON R	RN72K1J-181JE	435031814R1	
R461,R462,R463	C-CARBON R	RN72K1J-103JE	435031034R1	
R464,R465,R466	C-CARBON R	RN72K1J-103JE	435031034R1	
R467,R470,R471	C-CARBON R	RN72K1J-103JE	435031034R1	
R472,R473,R474	C-CARBON R	RN72K1J-103JE	435031034R1	
R475,R476,R477	C-CARBON R	RN72K1J-103JE	435031034R1	
R480,R481,R482	C-CARBON R	RN72K1J-152JE	435031524R1	

R483,R484,R485	C-CARBON R	RN72K1J-152JE	435031524R1	
R486,R487,R530	C-CARBON R	RN72K1J-152JE	435031524R1	
R490,R491,R492	C-CARBON R	RN72K1J-223JE	435032234R1	
R493,R494,R495	C-CARBON R	RN72K1J-223JE	435032234R1	
R496,R497,R500	C-CARBON R	RN72K1J-223JE	435032234R1	
R501,R502,R503	C-CARBON R	RN72K1J-223JE	435032234R1	
R504,R505,R506	C-CARBON R	RN72K1J-223JE	435032234R1	
R507,R510,R511	C-CARBON R	RN72K1J-223JE	435032234R1	
R512,R513,R514	C-CARBON R	RN72K1J-223JE	435032234R1	
R515,R516,R517	C-CARBON R	RN72K1J-223JE	435032234R1	
R520,R521,R522	C-CARBON R	RN72K1J-223JE	435032234R1	
R523,R524,R525	C-CARBON R	RN72K1J-223JE	435032234R1	
R526,R527	C-CARBON R	RN72K1J-223JE	435032234R1	
R531,R532,R533	C-CARBON R	RN72K1J-152JE	435031524R1	
R534,R535,R536	C-CARBON R	RN72K1J-152JE	435031524R1	
R537,R540,R541	C-CARBON R	RN72K1J-152JE	435031524R1	
R542,R543,R544	C-CARBON R	RN72K1J-152JE	435031524R1	
R545,R546,R547	C-CARBON R	RN72K1J-152JE	435031524R1	
R555,R556	METAL O R	RS1/2WBJ-22	443522204	
R557,R558	METAL O R	RS1/2WBJ-22	443522204	
R570,R571,R572	C-CARBON R	RN72K1J-681JE	435036814R1	
R573,R574,R575	C-CARBON R	RN72K1J-681JE	435036814R1	
R576,R577,R580	C-CARBON R	RN72K1J-681JE	435036814R1	
R581,R582,R583	C-CARBON R	RN72K1J-681JE	435036814R1	
R584,R585,R586	C-CARBON R	RN72K1J-681JE	435036814R1	
R587	C-CARBON R	RN72K1J-681JE	435036814R1	
R602,R603,R604	C-CARBON R	RN72K1J-221JE	435032214R1	
R605,R606	C-CARBON R	RN72K1J-221JE	435032214R1	<D>
R607	C-CARBON R	RN72K1J-221JE	435032214R1	
R608,R609	C-CARBON R	RN72K1J-221JE	435032214R1	<D>
R610,R612,R613	C-CARBON R	RN72K1J-221JE	435032214R1	
R611,R614,R629	C-CARBON R	RN72K1J-103JE	435031034R1	
R615,R616,R618	C-CARBON R	RN72K1J-221JE	435032214R1	
R617	C-CARBON R	RN72K1J-105JE	435031054R1	
R619,R620,R621	C-CARBON R	RN72K1J-221JE	435032214R1	
R622,R623,R625	C-CARBON R	RN72K1J-221JE	435032214R1	
R624	C-CARBON R	RN72K1J-473JE	435034734R1	
R632,R633,R634	C-CARBON R	RN72K1J-221JE	435032214R1	
R635,R645	C-CARBON R	RN72K1J-221JE	435032214R1	
R636,R638,R695	C-CARBON R	RN72K1J-000JE	435030004R1	
R637,R639	C-CARBON R	RN72K1J-222JE	435032224R1	
R640,R642	C-CARBON R	RN72K1J-102JE	435031024R1	
R641,R643	C-CARBON R	RN72K1J-273JE	435032734R1	
R647	C-CARBON R	RN72K1J-221JE	435032214R1	
R648,R649,R652	C-CARBON R	RN72K1J-221JE	435032214R1	
R650,R651,R661	C-CARBON R	RN72K1J-103JE	435031034R1	
R654,R655,R656	C-CARBON R	RN72K1J-221JE	435032214R1	
R657,R658,R659	C-CARBON R	RN72K1J-221JE	435032214R1	
R662,R667,R668	C-CARBON R	RN72K1J-221JE	435032214R1	
R669	C-CARBON R	RN72K1J-221JE	435032214R1	
R670,R671,R672	C-CARBON R	RN72K1J-221JE	435032214R1	
R673,R674,R677	C-CARBON R	RN72K1J-221JE	435032214R1	
R678,R679,R680	C-CARBON R	RN72K1J-221JE	435032214R1	
R681,R682,R683	C-CARBON R	RN72K1J-221JE	435032214R1	
R684,R685,R687	C-CARBON R	RN72K1J-221JE	435032214R1	
R686,R776	C-CARBON R	RN72K1J-223JE	435032234R1	
R688,R690,R697	C-CARBON R	RN72K1J-103JE	435031034R1	
R689,R691,R692	C-CARBON R	RN72K1J-221JE	435032214R1	
R693,R699,R701	C-CARBON R	RN72K1J-221JE	435032214R1	
R700	C-CARBON R	RN72K1J-103JE	435031034R1	
R702,R716,R720	C-CARBON R	RN72K1J-221JE	435032214R1	
R704,R705,R706	C-CARBON R	RN72K1J-102JE	435031024R1	
R707,R763	C-CARBON R	RN72K1J-102JE	435031024R1	
R708	C-CARBON R	RN72K1J-333JE	435033334R1	
R709	C-CARBON R	RN72K1J-563JE	435035634R1	
R710,R711	C-CARBON R	RN72K1J-563JE	435035634R1	
R712	C-CARBON R	RN72K1J-103JE	435031034R1	<A>
	C-CARBON R	RN72K1J-333JE	435033334R1	<D>
R713	C-CARBON R	RN72K1J-333JE	435033334R1	<A>
	C-CARBON R	RN72K1J-563JE	435035634R1	<D>
R714	C-CARBON R	RN72K1J-103JE	435031034R1	<A>
R715	C-CARBON R	RN72K1J-000JE	435030004R1	<D>

R721,R722,R723	C-CARBON R	RN72K1J-221JE	435032214R1	
R724,R726,R727	C-CARBON R	RN72K1J-472JE	435034724R1	
R728,R729,R730	C-CARBON R	RN72K1J-472JE	435034724R1	
R731	C-CARBON R	RN72K1J-472JE	435034724R1	
R733,R734,R735	C-CARBON R	RN72K1J-272JE	435032724R1	
R736,R737,R738	C-CARBON R	RN72K1J-103JE	435031034R1	
R739,R740,R741	C-CARBON R	RN72K1J-103JE	435031034R1	
R742,R743	C-CARBON R	RN72K1J-103JE	435031034R1	
R745,R746	C-CARBON R	RN72K1J-103JE	435031034R1	
R747,R748,R749	C-CARBON R	RN72K1J-103JE	435031034R1	
R751,R754,R756	C-CARBON R	RN72K1J-103JE	435031034R1	
R752	C-CARBON R	RN72K1J-224JE	435032244R1	
R753	C-CARBON R	RN72K1J-101JE	435031014R1	
R755,R757,R759	C-CARBON R	RN72K1J-222JE	435032224R1	
R758,R768	C-CARBON R	RN72K1J-103JE	435031034R1	
R760	METAL O R	RS1/2WBJ-10	443521004	
R766,R769	C-CARBON R	RN72K1J-271JE	435032714R1	
R770	C-CARBON R	RN72K1J-221JE	435032214R1	
R777	C-CARBON R	RN72K1J-000JE	435030004R1	
R781	C-CARBON R	RN72K1J-331JE	435033314R1	
R785	C-CARBON R	RN72K1J-470JE	435034704R1	
R786	C-CARBON R	RN72K1J-470JE	435034704R1	
R791	METAL R	RNU1/2WCJ-0.47	453534794	
R792	METAL R	RNU1/2WCJ-0.22	453532294	
R793	METAL R	RNU2WCJ-8.2	452730824F	
P101	PIN JACK	NPJ-2PDO543	25045758	
P102	ST JACK	LGY2502-0200FC	25045696	
JL703B	WIRE TRAP	NPLG-3P586	25055624	
JL7452A	SOCKET	NSCT-5P110	25050282	
P3101B	SOCKET	NSCT-15P2195	25052298	
P3102B	SOCKET	NSCT-8P2188	25052291	
P3103B,P3104B	SOCKET	NSCT-17P2197	25052300	
P3105B	SOCKET	NSCT-17P2197	25052300	
P601B	SOCKET	IMSA-9115S-12L	25052992	
P602B	SOCKET	NSCT-20P2200	25052303	
P701A	SOCKET	NSCT-13P2106	25052209	
P702	SOCKET	NSCT-9P2427	25052530	
P7534A	SOCKET	NSCT-40P2274	25052377	
P2004A,P2005A	PLUG	NPLG-13P0968	25056018	
P601A	PLUG	IMSA-9115B-12	25056342	
P602A	PLUG	NPLG-20P0975	25056025	
P710A	PLUG	NPLG-13P0968	25056018	<D>
P954A	PLUG	IMSA-9115B-15	25056345	
P959A	PLUG	IMSA-9115B-18	25056348	
P201	WS CLAMP	CB-71683(L=50)	260261	
PRIMARY CIRCUIT PC BOARD (NAPS-8664-1W/1X)				
SECONDARY CIRCUIT PC BOARD (NAPS-8665-1W/1X)				
SPEAKER TERMINAL PC BOARD (NAETC-8666-1W/1X)				
SPEAKER TERMINAL C PC BOARD (NAETC-8667-1W/1X)				
DRIVER CIRCUIT PC BOARD (NAAF-8668-1W/1X)				
AC INLET PC BOARD (NAETC-8671-1W/1X)				
TRANSFORMER TERMINAL PC BOARD (NAPS-8673-1W/1X)				
CIRCUIT NO.	**PART NAME**	**DESCRIPTION**	**PART NO.**	**REMARKS**
U5501	REMO SENS	GP1UM281XKVFH=16MM	241361	
Q5501	IC	ICL3221ECVZ	22242268R2	
Q951	IC	LM2940CT-5.0	22242242	
Q952	IC	S-812C53AY-Z-G	22242271	<D>
Q953	IC	7812HF(TA7812S)	222780124TOS	
Q5000,Q5001	TR	2SC2240-BL or	2211406 or	*
Q5002,Q5003	TR	2SC1845-E	2211733	*
Q5004,Q5005	TR	2SC2240-BL or	2211406 or	*
Q5006	TR	2SC1845-E	2211733	*
Q5010,Q5011	TR	2SC2240-BL or	2211406 or	*
Q5012,Q5013	TR	2SC1845-E	2211733	*
Q5014,Q5015	TR	2SC2240-BL or	2211406 or	*
Q5016	TR	2SC1845-E	2211733	*
Q5030,Q5031,Q5032	TR	2SA949-Y	2211354	
Q5033,Q5034	TR	2SA949-Y	2211354	
Q5035,Q5036	TR	2SA949-Y	2211354	
Q5040,Q5041,Q5042	TR	2SC2229-Y	2211634	
Q5043,Q5044	TR	2SC2229-Y	2211634	

Q5045,Q5046	TR	2SC2229-Y	2211634	
Q5050,Q5051	TR	2SC2240-BL or	2211406 or	
Q5052,Q5053	TR	2SC1845-E	2211733	
Q5054,Q5055	TR	2SC2240-BL or	2211406 or	
Q5056	TR	2SC1845-E	2211733	
Q5502	TR	2SB1240-R	2213794	
Q5503,Q5504	TR	2SB1240-R	2213794	
Q5505,Q5506,Q5507	TR	KRC102M or	2215960 or	
	TR	DTC114ES	2213290	
Q5508	TR	KRA102M or	2215770 or	
	TR	DTA114ES	2213510	
Q5509,Q5510	PHT CP	TLP421 or	24120103 or	
	PHT CP	PC817X	24120080	
Q912	TR	2SC1740S-R or	2213284 or	
	TR	2SC2458-GR or	2212115 or	
	TR	2SC1740S-S or	2213285 or	
	TR	KTC3199-GR	2215864	
Q954	TR	2SA965-Y	2211644	
Q955	TR	2SD1858-R	2213214	<D>
Q956	TR	KRC102M or	2215960 or	<D>
	TR	DTC114ES	2213290	<D>
Q957	TR	2SA1015-GR	2211455	<D>
Q958	TR	KRC102M or	2215960 or	<D>
	TR	DTC114ES	2213290	<D>
Q959	TR	2SA1930	2203000	<D>
Q960	TR	2SC1740S-R or	2213284 or	<D>
	TR	2SC1740S-S or	2213285 or	<D>
	TR	2SC2458-GR or	2212115 or	<D>
	TR	KTC3199-GR	2215864	<D>
D5000,D5001	ZENER D	DZ-5.6BSB or	224850562 or	
D5002,D5003	ZENER D	MTZJ5.6B	224470562	
D5004,D5005	ZENER D	DZ-5.6BSB or	224850562 or	
D5006	ZENER D	MTZJ5.6B	224470562	
D5501,D5502	DIODE	1SS133(DS) or	223280 or	
D5503,D5504	DIODE	1SS133 or	223163 or	
D5505,D5506	DIODE	1SS270A	223205	
D5507,D5508	SPCF D	SIR-34ST3F	225456	
D6600,D6603,D6605	DIODE	1SS133(DS) or	223280 or	
,D6607	DIODE	1SS133 or	223163 or	
	DIODE	1SS270A	223205	
D901,D902,D903	DIODE	1SS133(DS) or	223280 or	
D904,D905,D906	DIODE	1SS133 or	223163 or	
D907,D908,D909	DIODE	1SS270A	223205	
D910	ZENER D	DZ-6.8BSC or	224850683 or	<D>
	ZENER D	MTZJ6.8C or	224470683 or	<D>
	ZENER D	DZ-6.8BSB or	224850682 or	<D>
	ZENER D	MTZJ6.8B	224470682	<D>
D910	ZENER D	DZ-7.5BSB or	224850752 or	<A>
	ZENER D	MTZJ7.5B	224470752	<A>
D912,D913	DIODE	1SS133(DS) or	223280 or	
D951,D952	DIODE	1SS133 or	223163 or	
	DIODE	1SS270A	223205	
D953	DIODE	D10XB60H	22380337	
D956,D957	DIODE	RL1N4003 or	22380260 or	
	DIODE	GP104003E	22380035	
D958	ZENER D	DZ-33BSD or	224853304 or	
	ZENER D	MTZJ33D	224473304	
D959,D960	DIODE	RL1N4003 or	22380260 or	
	DIODE	GP104003E	22380035	
D961,D962,D963	DIODE	RL1N4003 or	22380260 or	
D964,D965,D966	DIODE	GP104003E	22380035	
D967	DIODE	1SS133(DS) or	223280 or	<D>
	DIODE	1SS133 or	223163 or	<D>
	DIODE	1SS270A	223205	<D>
D968,D969	DIODE	1SS133(DS) or	223280 or	
D970,D971	DIODE	1SS133 or	223163 or	
D991,D992	DIODE	1SS270A	223205	
L5501,L5502	CHOKE COIL	NCH-1452 022M	233454M022	
L6600,L6601,L6602	S COIL	S-1.3C	231176S	<A>
L6603,L6604	S COIL	S-1.3C	231176S	<A>
L6605,L6606	S COIL	S-1.3C	231176S	<A>
T902	P TRANS	NPT-1520JQ	2301812	! <D>

T902	P TRANS	NPT-1519GQ	2301811	! <A>
C5000,C5001,C5002	TF C	ECQ-B50V-221K	374722215	
C5003,C5004	TF C	ECQ-B50V-221K	374722215	
C5005,C5006	TF C	ECQ-B50V-221K	374722215	
C5010,C5011,C5012	VX C	CE04W50V-47M(VX)	393384707	
C5013,C5014	VX C	CE04W50V-47M(VX)	393384707	
C5015,C5016	VX C	CE04W50V-47M(VX)	393384707	
C5020,C5021,C5022	VX C	CE04W50V-10M(VX)	393381007	
C5023,C5024	VX C	CE04W50V-10M(VX)	393381007	
C5025,C5026	VX C	CE04W50V-10M(VX)	393381007	
C5040,C5041,C5042	VX C	CE04W25V-220M(VX)	393352217	
C5043,C5044	VX C	CE04W25V-220M(VX)	393352217	
C5045,C5046	VX C	CE04W25V-220M(VX)	393352217	
C5050,C5051,C5052	VX C	CE04W50V-47M(VX)	393384707	
C5053,C5054	VX C	CE04W50V-47M(VX)	393384707	
C5055,C5056	VX C	CE04W50V-47M(VX)	393384707	
C5080,C5081,C5082	CERA C	CC45SL50V-040C	345020401	
C5083,C5084	CERA C	CC45SL50V-040C	345020401	
C5085,C5086	CERA C	CC45SL50V-040C	345020401	
C5090,C5091,C5092	TF C	ECQ-B50V-101K	374721015	
C5093,C5094	TF C	ECQ-B50V-101K	374721015	
C5095,C5096	TF C	ECQ-B50V-101K	374721015	
C5100,C5101,C5102	VR C	CE04W100V-10M(VR)	394691007	
C5103,C5104	VR C	CE04W100V-10M(VR)	394691007	
C5105,C5106	VR C	CE04W100V-10M(VR)	394691007	
C5110,C5111,C5112	VR C	CE04W100V-10M(VR)	394691007	
C5113,C5114	VR C	CE04W100V-10M(VR)	394691007	
C5115,C5116	VR C	CE04W100V-10M(VR)	394691007	
C5501	VR C	CE04W16V-100M(VR)	394641017	
C5502,C5507	CERA C	CK45F50V-223Z	335622230	
C5503,C5504	VR C	CE04W50V-1M(VR)	394680107	
C5505,C5506	VR C	CE04W50V-1M(VR)	394680107	
C5508,C5509	TF C	ECQ-B50V-102J	374721024	
C5510	TF C	ECQ-B50V-102J	374721024	
C5511,C5512	VR C	CE04W16V-100M(VR)	394641017	
C5513,C970	CERA C	CK45F50V-223Z	335622230	
C5514	CERA C	CK45B50V-102K	335321025	
C5515,C5516	CERA C	CK45F50V-103Z	335621030	
C6600 ,C6602,C6603	CERA C	CK45F50V-103Z	335621030	
C6605,C6607	CERA C	CK45F50V-103Z	335621030	
C6640,C6641,C6642	TF C	ECQ-B50V-103J	374721034	<A>
C6643,C6644,C6645	TF C	ECQ-B50V-103J	374721034	<A>
C6646,C6647,C6648	TF C	ECQ-B50V-103J	374721034	<A>
C6650,C6651,C6652	TF C	ECQ-B50V-102J	374721024	<A>
C6653,C6654,C6655	TF C	ECQ-B50V-102J	374721024	<A>
C6656,C6657,C6658	TF C	ECQ-B50V-102J	374721024	<A>
C902	TF C	ECQ-B50V-223J	374722234	
C903	VR C	CE04W35V-2200M(VR)	394662227S	
C904	VR C	CE04W50V-100M(VR)	394681017	
C906,C953	VR C	CE04W50V-3.3M(VR)	394680337	
C912	IS C	RE275V-103M or	3500196S or	!
	IS C	LE103-C3.5	3800042S	!
C929,C964	TF C	ECQ-B50V-102J	374721024	
C951,C952	TF C	ECQ-V50V-334J	374723344	
C954	VR C	CE04W16V-10000M(VR)	394641037S	
C955	VR C	CE04W16V-3300M(VR)	394643327S	
C956	VR C	CE04W50V-10M(VR)	394681007	
C957	VR C	CE04W16V-100M(VR)	394641017	
C958	VR C	CE04W50V-10M(VR)	394681007	<D>
C959	VR C	CE04W16V-100M(VR)	394641017	<D>
C960,C961	VR C	CE04W50V-10M(VR)	394681007	
C962,C963	TF C	ECQ-V50V-334J	374723344	
C965	VR C	CE04W35V-3300M(VR)	394663327S	
C966	VR C	CE04W35V-1000M(VR)	394661027S	
C967	VR C	CE04W50V-220M(VR)	394682217	
C968	VR C	CE04W63V-220M(VR)	394672217	
C969	VR C	CE04W50V-47M(VR)	394684707	
C971	VR C	CE04W16V-1000M(VR)	394641027S	<A>
C972	TF C	ECQ-B50V-334J	374723344	<A>
C973	VR C	CE04W16V-470M(VR)	394644717	
C974	VR C	CE04W50V-10M(VR)	394681007	<D>
C991	TF C	ECQ-B50V-222J	374722224	

R5000,R5001,R5002	CARBON R	R16J-1K	417341024	
R5003,R5004	CARBON R	R16J-1K	417341024	
R5005,R5006	CARBON R	R16J-1K	417341024	
R5010,R5011,R5012	CARBON R	R16J-56K	417345634	
R5013,R5014	CARBON R	R16J-56K	417345634	
R5015,R5016	CARBON R	R16J-56K	417345634	
R5020,R5021,R5022	CARBON R	R16J-330	417343314	
R5023,R5024	CARBON R	R16J-330	417343314	
R5025,R5026	CARBON R	R16J-330	417343314	
R5030,R5031,R5032	CARBON R	R16J-120K	417341244	
R5033,R5034	CARBON R	R16J-120K	417341244	
R5035,R5036	CARBON R	R16J-120K	417341244	
R5040,R5041,R5042	CARBON R	R16J-2.2K	417342224	
R5043,R5044	CARBON R	R16J-2.2K	417342224	
R5045,R5046	CARBON R	R16J-2.2K	417342224	
R5050,R5051,R5052	CARBON R	R16J-4.7K	417344724	
R5053,R5054	CARBON R	R16J-4.7K	417344724	
R5055,R5056	CARBON R	R16J-4.7K	417344724	
R5060,R5061,R5062	CARBON R	R16J-1.2K	417341224	
R5063,R5064	CARBON R	R16J-1.2K	417341224	
R5065,R5066	CARBON R	R16J-1.2K	417341224	
R5080,R5081,R5082	CARBON R	R16J-470	417344714	
R5083,R5084	CARBON R	R16J-470	417344714	
R5085,R5086	CARBON R	R16J-470	417344714	
R5090,R5091,R5092	CARBON R	R16J-100K	417341044	
R5093,R5094	CARBON R	R16J-100K	417341044	
R5095,R5096	CARBON R	R16J-100K	417341044	
R5100,R5101,R5102	CARBON R	R16J-100K	417341044	
R5103,R5104	CARBON R	R16J-100K	417341044	
R5105,R5106	CARBON R	R16J-100K	417341044	
R5110,R5111,R5112	CARBON R	R16J-1K	417341024	
R5113,R5114	CARBON R	R16J-1K	417341024	
R5115,R5116	CARBON R	R16J-1K	417341024	
R5130,R5131,R5132	CARBON R	R16J-22K	417342234	
R5133,R5134	CARBON R	R16J-22K	417342234	
R5135,R5136	CARBON R	R16J-22K	417342234	
R5160,R5161,R5162	NF CARBON R	R25J-100	415471014	
R5163,R5164	NF CARBON R	R25J-120	415471214	
R5165,R5166	NF CARBON R	R25J-120	415471214	
R5170,R5171,R5172	NF CARBON R	R25J-100	415471014	
R5173,R5174	NF CARBON R	R25J-120	415471214	
R5175,R5176	NF CARBON R	R25J-120	415471214	
R5180,R5181,R5182	NF CARBON R	R25J-10	415471004	
R5183,R5184	NF CARBON R	R25J-10	415471004	
R5185,R5186	NF CARBON R	R25J-10	415471004	
R5190,R5191,R5192	NF CARBON R	R25J-10	415471004	
R5193,R5194	NF CARBON R	R25J-10	415471004	
R5195,R5196	NF CARBON R	R25J-10	415471004	
R5200,R5201,R5202	CARBON R	R16J-22K	417342234	
R5203,R5204	CARBON R	R16J-22K	417342234	
R5205,R5206	CARBON R	R16J-22K	417342234	
R5230,R5231,R5232	CARBON R	R16J-120K	417341244	
R5233,R5234	CARBON R	R16J-120K	417341244	
R5235,R5236	CARBON R	R16J-120K	417341244	
R5502,R5503	CARBON R	R16J-330	417343314	
R5504,R5505,R5506	CARBON R	R16J-10K	417341034	
R5507,R5508	CARBON R	R16J-330	417343314	
R5509,R5510,R5521	CARBON R	R16J-100	417341014	
R5511,R5512,R5513	CARBON R	R16J-3.9	417340394	
R5514,R5515,R5516	CARBON R	R16J-1K	417341024	
R5517,R5518,R5519	CARBON R	R16J-220K	417342244	
R5520	CARBON R	R16J-100K	417341044	
R5522	CARBON R	R16J-10K	417341034	
R5524	CARBON R	R16J-1K	417341024	
R5525,R5526	CARBON R	R16J-100	417341014	
R5527	CARBON R	R16J-100	417341014	<D>
R6600,R6601,R6602	CARBON R	R16J-22	417342204	<A>
R6603,R6604,R6605	CARBON R	R16J-22	417342204	<A>
R6606,R6610,R6611	CARBON R	R16J-22	417342204	<A>
R6612,R6613,R6614	CARBON R	R16J-22	417342204	<A>
R6615,R6616	CARBON R	R16J-22	417342204	<A>
R6690	METAL R	RNU1/2WCJ-0.22	453532294	

R909,R914	CARBON R	R16J-100K	417341044	
R913	CARBON R	R16J-1K	417341024	
R946	METAL O R	RS1/2WBJ-10	443521004	<D>
R951,R952	METAL R	RNU1/2WCJ-2.2	453530224	
R953,R967	METAL R	RNU1WCJ-0.22	453632294	
R954	METAL R	RNU1/2WCJ-2.2	453530224	
R955	METAL R	RNU1/2WCJ-2.2	453530224	<D>
R956	METAL R	RNU1/4WJ-33	4500185	<D>
R957,R959	CARBON R	R16J-2.2K	417342224	<D>
R958	CARBON R	R16J-1K	417341024	<D>
R961	METAL R	RNU1/2WCJ-4.7	453530474	
R962	METAL R	RNU1/2WCJ-2.2	453530224	
R963	METAL O R	RS1/2WBJ-22	443522204	
R964	CARBON R	R16J-15K	417341534	
R965	CARBON R	R16J-33K	417343334	
R966	METAL R	RNU1/2WCJ-0.22	453532294	<D>
R969	METAL R	RNU1/2WCJ-0.22	453532294	
R970	METAL R	RNU1WCJ-2.2	453630224	
R971	METAL R	RNU1/2WCJ-2.2	453530224	
RL6600,RL6602	RELAY	NRL-2P5A-DC24-158 or	25065618 or	
RL6603,RL6605	RELAY	NRL-2P5A-DC24-129	25065563	
RL6607	RELAY	NRL-2P5A-DC24-158 or	25065618 or	
	RELAY	NRL-2P5A-DC24-129	25065563	
RL902	RELAY	NRL-1P10A-DC9-186	25065683	!
P5502	PIN JACK	NPJ-1PDP526	25045738	<D>
P5503	PIN JACK	NPJ-2PDBL249	25045424	
P5505,P5506,P5507	ST JACK	HSJ1002-01-1020	25045647	
P6600	TRM	NTM-8PDMN341	25060412	<D>
	TRM	NTM-8PDMN342	25060413	<A>
P6602	TRM	NTM-2PDMN318	25060387	<D>
	TRM	NTM-2PDMN319	25060388	<A>
P6605	TRM	NTM-4PDMN345	25060416	<D>
	TRM	NTM-4PDMN355	25060426	<A>
P6607	TRM	NTM-4PDMN308	25060377	<D>
	TRM	NTM-4PDMN332	25060402	<A>
P908	AC INLET	NPLG-2P913	25055960	!
P910	AC OUTLET	NSCT-4P913	25051126	! <D>
	AC OUTLET	NSCT-2P2013	25052115	! <A>
F901A,F901B	FUSE HOL	NSCT-1P2031	25052133	!
F903A.F903B	FUSE HOL	NSCT-1P2031	25052133	!
F931A,F931B	FUSE HOL	NSCT-1P2031	25052133	!
F932A,F932B	FUSE HOL	NSCT-1P2031	25052133	!
F951A,F951B	FUSE HOL	NSCT-1P2031	25052133	!
F952A,F952B	FUSE HOL	NSCT-1P2031	25052133	!
F901C,F951C	LABEL	T6.3AL/250V	29361681	<A>
F903C	LABEL	T2.5AL250V	29361747	<A>
F931C	LABEL	T1.6AL250V	29361769	<A>
F951C	LABEL	T6.3AL/250V	29361681	<A>
JL2006B	SOCKET	NSCT-5P97	25050269	
JL6006A	WIRE HOL	NSCT-5P896	25051109	
JL6600B	SOCKET	NSCT-7P99	25050271	
JL6602A	WIRE HOL	NSCT-4P895	25051108	
JL6602B	SOCKET	NSCT-4P96	25050268	
JL6603B	SOCKET	NSCT-9P101	25050273	
JL911A	WIRE HOL	NSCT-6P877	25051090	
JL9501A	WIRE HOL	NSCT-7P898	25051111	
JL9501B	SOCKET	NSCT-7P99	25050271	
JL957B	SOCKET	NSCT-5P97	25050269	
P5501	SOCKET	7906-09FHA or	25053103 or	
	SOCKET	NSCT-9P2277	25052379	
P6000A,P6001A	SOCKET	NSCT-5P2185	25052288	
P6002A,P6003A	SOCKET	NSCT-5P2185	25052288	
P6004A,P6005A	SOCKET	NSCT-5P2185	25052288	
P954B	SOCKET	IMSA-9115S-15L	25052995	
P959B	SOCKET	IMSA-9115S-18L	25052998	
JL911B	WIRE TRAP	NPLG-6P589	25055627	
P5004A	PLUG	NPLG-13P141	25055157	
P912	PLUG	NPLG-2P631	25055675	
P951	PLUG	NPLG-4P151	25055167	<D>
P952	PLUG	NPLG-5P119	25055135	<D>
P955	PLUG	NPLG-2P83	25055099	<D>
D953B,Q951D	HEAT SINK	RAD-183	27160526	

P6011B	RETAINER	(BUS-U)	27141859	
Q951F	RETAINER	(U)	27142012	
Q951H	SPACER	8X3X0.188	82143010GR	
D953A,Q951A,Q951(	SCREW	3P+10FN(3BC)	82143010GR	
Q953A	SCREW	3P+10FN(3BC)	82143010GR	
Q959A	SCREW	3P+10FN(3BC)	82143010GR	<D>
POWER AMPLIFIER PC BOARD (NAAF-8678-1J)				
THERMAL DETECTOR PC BOARD (NAETC-8680-1J)				
SURROUND BACK AMPLIFIER PC BOARD (NAAF-8682-1J)				
CIRCUIT NO.	**PART NAME**	**DESCRIPTION**	**PART NO.**	**REMARKS**
Q3001	IC	NE5532APSR	22242283R2	
Q3002	IC	NJU7311AM	22242209R2	
Q3003	IC	NJW1157B	22242193R3	
Q3004	IC	NE5532APSR	22242283R2	
Q3005	IC(REGULATOR)	78L07(SMT) or	222780073R2 or	
	IC(REGULATOR)	NJM78L07UA or	222780073R2JR or	
	IC(REGULATOR)	TA78L07F	222780073R2TO	
Q3006	IC(REGULATOR)	79L07(SMT)	222790073R2	
Q3007	IC	NE5532APSR	22242283R2	
Q3009	IC	BD3814FV	22242157R2	
Q3505	IC	LM2940CT-5.0	22242242	
Q3506	IC(REGULATOR)	79005HF(TA79005S) or	222790054TOS or	
	IC(REGULATOR)	7905FA(NJM7905FA)	222790054JRC	
Q3507	IC(REGULATOR)	7812HF(TA7812S) or	222780124TOS or	
	IC(REGULATOR)	7812 or	222780124 or	
	IC(REGULATOR)	7812PI(S7812PI)	222780124AUK	
Q3508	IC(REGULATOR)	79012HF(TA79012S) or	222790124TOS or	
	IC(REGULATOR)	7912FA(NJM7912FA) or	222790124JRC or	
	IC(REGULATOR)	7912PI(S7912PI)	222790124AUK	
Q6380	IC	LM61CIZ	22242212	
Q3200,Q3201,Q3202	TR	RN1443	2215510R2	
Q3203,Q3204,Q3205	TR	RN1443	2215510R2	
Q3206,Q3207,Q3210	TR	RN1443	2215510R2	
Q3211,Q3212,Q3213	TR	RN1443	2215510R2	
Q3214,Q3215,Q3216	TR	RN1443	2215510R2	
Q3217	TR	RN1443	2215510R2	
Q3251,Q3252	TR	KRC102S or	2216190R2 or	
	TR	RN1402	2214470R2	
Q3401,Q3402,Q3403	TR	RN1443	2215510R2	
Q3404,Q3405,Q3406	TR	RN1443	2215510R2	
Q6000,Q6001,Q6002	TR	2SC1740S-S	2213285	
Q6003,Q6004,Q6005	TR	2SC1740S-S	2213285	
Q6006,Q6010,Q6011	TR	2SC1740S-S	2213285	
Q6012,Q6013,Q6014	TR	2SC1740S-S	2213285	
Q6015,Q6016	TR	2SC1740S-S	2213285	
Q6030,Q6031	TR	2SC5171 or	2203010 or	
Q6032,Q6033	TR	2SC5993-Q,P	2217161	
Q6034,Q6035	TR	2SC5171 or	2203010 or	
Q6036	TR	2SC5993-Q,P	2217161	
Q6040,Q6041	TR	2SA1930 or	2203000 or	
Q6042,Q6043	TR	2SA2140-Q,P	2217151	
Q6044,Q6045	TR	2SA1930 or	2203000 or	
Q6046	TR	2SA2140-Q,P	2217151	
Q6070,Q6071	TR	2SC2229-Y or	2211634 or	
Q6072,Q6073	TR	2SC2229-O	2211633	
Q6074,Q6075	TR	2SC2229-Y or	2211634 or	
Q6076	TR	2SC2229-O	2211633	
Q6701,Q6702	TR	KTC3875-GR or	2216175R2 or	
	TR	2SC2712-GR	2213145R2	
Q6703	TR	2SA1163-BL	2216756R2	
Q6704	TR	KTA1504-GR or	2216185R2 or	
	TR	2SA1162-GR	2214375R2	
Q6707	TR	KTC3875-GR or	2216175R2 or	
	TR	2SC2712-GR	2213145R2	
D3005,D3006	C-DIODE	KDS4148U or	223283R2 or	
D3201,D3202,D3938	C-DIODE	1SS352 or	223234R2 or	
D3939,D3940,D3941	C-DIODE	1SS355 or	223269R2 or	
D6701,D6702,D6902	C-DIODE	MA2J111	223279R2	
D6000,D6001,D6002	DIODE	1SS133(DS) or	223280 or	
D6003,D6004	DIODE	1SS133 or	223163 or	
D6005,D6006,D6010	DIODE	1SS270A	223205	
D6011,D6012,D6013	DIODE	1SS133(DS) or	223280 or	

D6014,D6015,D6016	DIODE	1SS133 or	223163 or	
	DIODE	1SS270A	223205	
D6703,D6704	ZENER D	UDZS5.1B or	224550510R2 or	
	ZENER D	HZU5.1B	224660514R2	
D6901,D6903	DIODE	D10XB60H	22380337	
C3001,C3002	TF C	ECQ-B50V-221K	374722215	
C3005,C3006,C3007	C-CERA C	CC725CH1H-221J1	342102214R1	
C3008,C3011,C3012	C-CERA C	CC725CH1H-221J1	342102214R1	
C3015,C3016,C3017	C-CERA C	CC725CH1H-221J1	342102214R1	
C3018,C3019,C3020	C-CERA C	CC725CH1H-221J1	342102214R1	
C3021,C3022,C3106	C-CERA C	CC725CH1H-221J1	342102214R1	
C3023,C3024	C-CERA C	CC725CH1H-221J1	342102214R1	
C3025,C3026	C-CERA C	CC725CH1H-221J1	342102214R1	
C3027,C3028	TF C	ECQ-B50V-102J	374721024	
C3029,C3030,C3031	C-CERA C	CC725CH1H-102J1	342101024R1	
C3032,C3052,C3053	C-CERA C	CC725CH1H-102J1	342101024R1	
C3033,C3034	C-CERA C	CC725CH1H-102J1	342101024R1	
C3035,C3036	VX C	CE04W25V-47M(VX)	393354707	
C3037,C3038	VX C	CE04W10V-220M(VX)	393332217	
C3041,C3042	TF C	ECQ-B50V-123J	374721234	
C3043,C3044	TF C	ECQ-B50V-392J	374723924	
C3045,C3046	ELECT C	CE04W50V-10M(S)	353781009	
C3047,C3048	VX C	CE04W25V-47M(VX)	393354707	
C3049,C3050	C-CERA C	CC725CH1H-101J1	342101014R1	
C3051,C3052,C3053	C-CERA C	CC725CH1H-102J1	342101024R1	
C3054,C3055	C-CERA C	CC725CH1H-102J1	342101024R1	
C3057,C3058	C-CERA C	CC725CH1H-102J1	342101024R1	
C3059,C3060,C3061	VX C	CE04W50V-10M(VX)	393381007	
C3062,C3071,C3072	VX C	CE04W50V-10M(VX)	393381007	
C3063,C3064,C3065	VX C	CE04W25V-47M(VX)	393354707	
C3066,C3067,C3068	VX C	CE04W25V-47M(VX)	393354707	
C3069,C3070,C3084	VX C	CE04W25V-47M(VX)	393354707	
C3077,C3078,C3079	VX C	CE04W50V-10M(VX)	393381007	
C3080,C3081,C3082	VX C	CE04W50V-10M(VX)	393381007	
C3083,C3085,C3086	VX C	CE04W50V-10M(VX)	393381007	
C3087	VX C	CE04W50V-1M(VX)	393380107	
C3088,C3091	VX C	CE04W50V-4.7M(VX)	393380477	
C3089,C3092	TF C	ECQ-V50V-224J	374722244	
C3090,C3093	TF C	ECQ-B50V-472J	374724724	
C3096,C3097	VX C	CE04W16V-470M(VX)	393344717	
C3098,C3099	VX C	CE04W50V-10M(VX)	393381007	
C3100,C3101	VX C	CE04W25V-220M(VX)	393352217	
C3103,C3104	C-CERA C	CC725CH1H-330J1	342103304R1	
C3105,C3108,C3132	VX C	CE04W50V-10M(VX)	393381007	
C3107	C-CERA C	CK725B1H-103K1	332101035R1	
C3109,C3110	VX C	CE04W25V-220M(VX)	393352217	
C3111,C3113,C3114	C-CERA C	CC725CH1H-102J1	342101024R1	
C3115,C3116	VX C	CE04W10V-220M(VX)	393332217	
C3121,C3122	VX C	CE04W25V-47M(VX)	393354707	
C3123,C3124	VX C	CE04W25V-47M(VX)	393354707	
C3133,C3134,C3135	VX C	CE04W50V-10M(VX)	393381007	
C3136,C3137	VX C	CE04W50V-10M(VX)	393381007	
C3200,C3201,C3202	VX C	CE04W50V-47M(VX)	393384707	
C3203,C3204	VX C	CE04W50V-47M(VX)	393384707	
C3205,C3206	VX C	CE04W50V-47M(VX)	393384707	
C3401,C3402	VX C	CE04W50V-10M(VX)	393381007	
C3403,C3404	VX C	CE04W25V-47M(VX)	393354707	
C3405,C3406	TF C	ECQ-V50V-104J	374721044	
C3407,C3408	TF C	ECQ-V50V-104J	374721044	
C3409,C3410	TF C	ECQ-B50V-472J	374724724	
C3411,C3412	VX C	CE04W50V-22M(VX)	393382207	
C3415,C3416	C-CERA C	CK725B1H-103K1	332101035R1	
C3417	VX C	CE04W50V-4.7M(VX)	393380477	
C3939,C3940,C3941	VX C	CE04W50V-10M(VX)	393381007	
C3942,C3943,C3944	VX C	CE04W50V-10M(VX)	393381007	
C3945	VX C	CE04W10V-100M(VX)	393331017	
C3946,C6706	VX C	CE04W50V-10M(VX)	393381007	
C6020,C6021,C6022	VX C	CE04W50V-47M(VX)	393384707	
C6023,C6024	VX C	CE04W50V-47M(VX)	393384707	
C6025,C6026	VX C	CE04W50V-47M(VX)	393384707	
C6030,C6031,C6032	TF C	ECQ-V100-473J	374734734	
C6033,C6034	TF C	ECQ-V100-473J	374734734	

C6035,C6036	TF C	ECQ-V100-473J	374734734	
C6701	VR C	CE04W16V-220M(VR)	394642217	
C6703,C6705	C-CERA C	CK725F1H-223Z1	332152230R1	
C6704	VR C	CE04W50V-1M(VR)	394680107	
C6901,C6902	ELECT C	CE69W71V-12000M	3504432	
C6911	C-CERA C	CC725CH1H-102J1	342101024R1	
C6912,C6913	TF C	ECQ-V100-334J	374733344	
C6915,C6916	TF C	ECQ-V50V-334J	374723344	
R3001,R3002,R3005	C-CARBON R	RN72K1J-331JE	435033314R1	
R3006,R3009,R3010	C-CARBON R	RN72K1J-331JE	435033314R1	
R3007,R3008,R3019	C-CARBON R	RN72K1J-563JE	435035634R1	
R3013,R3014,R3017	C-CARBON R	RN72K1J-331JE	435033314R1	
R3018,R3021,R3022	C-CARBON R	RN72K1J-331JE	435033314R1	
R3020,R3027,R3028	C-CARBON R	RN72K1J-563JE	435035634R1	
R3025,R3026,R3029	C-CARBON R	RN72K1J-331JE	435033314R1	
R3030,R3033,R3034	C-CARBON R	RN72K1J-331JE	435033314R1	
R3037,R3038,R3041	C-CARBON R	RN72K1J-331JE	435033314R1	
R3039,R3040,R3043	C-CARBON R	RN72K1J-563JE	435035634R1	
R3042	C-CARBON R	RN72K1J-331JE	435033314R1	
R3044	C-CARBON R	RN72K1J-563JE	435035634R1	
R3045,R3046	C-CARBON R	RN72K1J-331JE	435033314R1	
R3047,R3048	C-CARBON R	RN72K1J-563JE	435035634R1	
R3053,R3054,R3057	C-CARBON R	RN72K1J-101JE	435031014R1	
R3058,R3061	C-CARBON R	RN72K1J-101JE	435031014R1	
R3059,R3060,R3063	C-CARBON R	RN72K1J-224JE	435032244R1	
R3062	C-CARBON R	RN72K1J-101JE	435031014R1	
R3064	C-CARBON R	RN72K1J-224JE	435032244R1	
R3065,R3066	C-CARBON R	RN72K1J-101JE	435031014R1	
R3067,R3068	C-CARBON R	RN72K1J-224JE	435032244R1	
R3069,R3070	C-CARBON R	RN72K1J-474JE	435034744R1	
R3071,R3072	C-CARBON R	RN72K1J-561JE	435035614R1	
R3073,R3074	C-CARBON R	RN72K1J-274JE	435032744R1	
R3075,R3076	C-CARBON R	RN72K1J-223JE	435032234R1	
R3077,R3078	C-CARBON R	RN72K1J-122JE	435031224R1	
R3079,R3080	C-CARBON R	RN72K1J-101JE	435031014R1	
R3081,R3082	C-CARBON R	RN72K1J-100JE	435031004R1	
R3083,R3084,R3085	C-CARBON R	RN72K1J-221JE	435032214R1	
R3086,R3087,R3088	C-CARBON R	RN72K1J-221JE	435032214R1	
R3089,R3090	C-CARBON R	RN72K1J-220JE	435032204R1	
R3091,R3092,R3104	C-CARBON R	RN72K1J-122JE	435031224R1	
R3093,R3094	C-CARBON R	RN72K1J-471JE	435034714R1	
R3095,R3096,R3097	C-CARBON R	RN72K1J-103JE	435031034R1	
R3098,R3099,R3100	C-CARBON R	RN72K1J-103JE	435031034R1	
R3101,R3102	C-CARBON R	RN72K1J-220JE	435032204R1	
R3103,R3419	C-CARBON R	RN72K1J-473JE	435034734R1	
R3105	C-CARBON R	RN72K1J-153JE	435031534R1	
R3106,R6702,R6707	C-CARBON R	RN72K1J-103JE	435031034R1	
R3112,R3113,R3114	C-CARBON R	RN72K1J-000JE	435030004R1	
R3117,R3118	METAL O R	RS1/2WBJ-22	443522204	
R3119,R3120,R3121	C-CARBON R	RN72K1J-104JE	435031044R1	
R3123,R3124	C-CARBON R	RN72K1J-331JE	435033314R1	
R3125,R3126	C-CARBON R	RN72K1J-563JE	435035634R1	
R3127,R3128	C-CARBON R	RN72K1J-100JE	435031004R1	
R3129,R3130	C-CARBON R	RN72K1J-000JE	435030004R1	
R3210,R3211,R3212	C-CARBON R	RN72K1J-224JE	435032244R1	
R3213,R3214	C-CARBON R	RN72K1J-224JE	435032244R1	
R3215,R3216	C-CARBON R	RN72K1J-224JE	435032244R1	
R3217,R6708	C-CARBON R	RN72K1J-224JE	435032244R1	
R3220,R3221,R3222	C-CARBON R	RN72K1J-271JE	435032714R1	
R3223,R3224	C-CARBON R	RN72K1J-271JE	435032714R1	
R3225,R3226,R3227	C-CARBON R	RN72K1J-271JE	435032714R1	
R3230,R3231	C-CARBON R	RN72K1J-101JE	435031014R1	
R3232,R3233,R3234	C-CARBON R	RN72K1J-101JE	435031014R1	
R3235,R3236,R3237	C-CARBON R	RN72K1J-101JE	435031014R1	
R3251,R3252	METAL O R	RS1WBJ-120	443621214	
R3401,R3402,R3403	C-CARBON R	RN72K1J-101JE	435031014R1	
R3404,R3405	C-CARBON R	RN72K1J-472JE	435034724R1	
R3407,R3408	C-CARBON R	RN72K1J-223JE	435032234R1	
R3409,R3410	C-CARBON R	RN72K1J-271JE	435032714R1	
R3411,R3412	C-CARBON R	RN72K1J-101JE	435031014R1	
R3417,R3418	C-CARBON R	RN72K1J-472JE	435034724R1	
R3419	C-CARBON R	RN72K1J-473JE	435034734R1	

R3420	C-CARBON R	RN72K1J-472JE	435034724R1	
R3421	C-CARBON R	RN72K1J-271JE	435032714R1	
R3422	C-CARBON R	RN72K1J-101JE	435031014R1	
R3423	C-CARBON R	RN72K1J-223JE	435032234R1	
R3509,R3510	METAL R	RNU1/2WCJ-0.22	453532294	
R6010,R6011,R6012	CARBON R	R16J-5.6K	417345624	
R6013,R6014	CARBON R	R16J-5.6K	417345624	
R6015,R6016	CARBON R	R16J-5.6K	417345624	
R6020,R6021,R6022	CARBON R	R16J-3.9K	417343924	
R6023,R6024	CARBON R	R16J-3.9K	417343924	
R6025,R6026	CARBON R	R16J-3.9K	417343924	
R6030,R6031,R6032	CARBON R	R16J-470	417344714	
R6033,R6034	CARBON R	R16J-470	417344714	
R6035,R6036	CARBON R	R16J-470	417344714	
R6040,R6041,R6042	TRIM R	N06HR2KBC	5210390	
R6043,R6044	TRIM R	N06HR2KBC	5210390	
R6045,R6046	TRIM R	N06HR2KBC	5210390	
R6050,R6051,R6052	CARBON R	R16J-3.3K	417343324	
R6053,R6054	CARBON R	R16J-3.3K	417343324	
R6055,R6056	CARBON R	R16J-3.3K	417343324	
R6070,R6071,R6072	NF CARBON R	R25J-82	415478204	
R6073,R6074	NF CARBON R	R25J-150	415471514	
R6075,R6076	NF CARBON R	R25J-220	415472214	
R6080,R6081,R6082	CARBON R	R25J-0.22	415472294	
R6083,R6084	CARBON R	R25J-0.22	415472294	
R6085,R6086	CARBON R	R25J-0.22	415472294	
R6090,R6091,R6092	CARBON R	R25J-0.22	415472294	
R6093,R6094	CARBON R	R25J-0.22	415472294	
R6095,R6096	CARBON R	R25J-0.22	415472294	
R6100,R6101,R6102	METAL PR	MPR5W+5W 0R22 or	4000233 or	
R6103,R6104	METAL PR	RGC55 0.22 or	4000132 or	
R6105,R6106	METAL PR	RF-5EGKR22	4000201	
R6120,R6121,R6122	NF CARBON R	R25J-2.2	415470224	
R6123,R6124	NF CARBON R	R25J-2.2	415470224	
R6125,R6126	NF CARBON R	R25J-2.2	415470224	
R6130,R6131,R6132	METAL R	RNU1WCJ-8.2	453630824	
R6133,R6134	METAL R	RNU1WCJ-8.2	453630824	
R6135,R6136	METAL R	RNU1WCJ-8.2	453630824	
R6140,R6141,R6142	CARBON R	R16J-22K	417342234	
R6143,R6144	CARBON R	R16J-22K	417342234	
R6145,R6146	CARBON R	R16J-22K	417342234	
R6150,R6151,R6152	CARBON R	R16J-12K	417341234	
R6153,R6154	CARBON R	R16J-12K	417341234	
R6155,R6156	CARBON R	R16J-12K	417341234	
R6160,R6161,R6162	CARBON R	R16J-33K	417343334	
R6163,R6164	CARBON R	R16J-33K	417343334	
R6165,R6166	CARBON R	R16J-33K	417343334	
R6180,R6181	METAL O R	RS1/2WBJ-390	443523914	
R6190,R6191,R6192	CARBON R	R16J-47K	417344734	
R6193,R6194	CARBON R	R16J-47K	417344734	
R6195,R6196	CARBON R	R16J-47K	417344734	
R6197	METAL R	RNU1/2WCJ-0.22	453532294	
R6210,R6211,R6212	CARBON R	R16J-47K	417344734	
R6213,R6214	CARBON R	R16J-47K	417344734	
R6215,R6216	CARBON R	R16J-47K	417344734	
R6240,R6241,R6242	CARBON R	R16J-220K	417342244	
R6243,R6244	CARBON R	R16J-220K	417342244	
R6245,R6246	CARBON R	R16J-220K	417342244	
R6701	C-CARBON R	RN72K1J-223JE	435032234R1	
R6704,R6903	C-CARBON R	RN72K1J-473JE	435034734R1	
R6705,R6710	C-CARBON R	RN72K1J-183JE	435031834R1	
R6706	C-CARBON R	RN72K1J-224JE	435032244R1	
R6708	C-CARBON R	RN72K1J-333JE	435033334R1	
R6709	C-CARBON R	RN72K1J-562JE	435035624R1	
R6902	C-CARBON R	RN72K1J-102JE	435031024R1	
RL3201,RL3202	RELAY	NRL-2P2A-DC4.5-173 or	25065658 or	
	RELAY	NPL-2P1A-DC4.5-169	25065645	
RL6901,RL6902	RELAY	NRL-1P10A-DC12-140 or	25065584 or	
	RELAY	NRL-1P10A-DC12-143	25065588	
F6901A,F6901B	FUSE HOLDER	SN5051	250113	!
F6902A,F6902B	FUSE HOLDER	SN5051	250113	!
P3001	PIN JACK	NPJ-2PDBL249	25045424	

P3002,P3003	PIN JACK	NPJ-6PDRW394	25045583	
P3004	PIN JACK	NPJ-4PDRW393	25045582	
P3005	PIN JACK	NPJ-6PDWRLEGP522	25045734	
P3006,P3009	PIN JACK	NPJ-2PDNT523	25045735	
P3008	PIN JACK	NPJ-6PDWRLEGP522	25045734	
JL6006B,JL6200B	SOCKET	NSCT-5P97	25050269	
JL6200A	WIRE HOL	NSCT-5P896	25051109	
JL6600A	WIRE HOL	NSCT-7P898	25051111	
JL6603A	WIRE HOL	NSCT-9P900	25051113	
JL703A	WIRE HOL	NSCT-3P874	25051087	
P5004B	SOCKET AS	NSAS-26P1494	2009990954UL	
P3101A	PLUG	NPLG-15P0970	25056020	
P3102A	PLUG	NPLG-8P0963	25056013	
P3103A,P3104A	PLUG	NPLG-17P0972	25056022	
P3105A	PLUG	NPLG-17P0972	25056022	
P6000A,P6001A	PLUG	NPLG-5P0960	25056010	
P6002A,P6003A	PLUG	NPLG-5P0960	25056010	
P6004A,P6005A	PLUG	NPLG-5P0960	25056010	
P6080,P6081,P6082	PLUG	NPLG-2P29	25055038	
P6083,P6084	PLUG	NPLG-2P29	25055038	
P6085,P6086	PLUG	NPLG-2P29	25055038	
P6952A	PLUG	NPLG-10P157	25055173	
P6380	RETAINER	(PTH) or	27141884-1 or	
	RETAINER	(PTH)	27141884	
P6911A	RETAINER	(BUS-D)	27141860	
Q3505A	HEAT SINK	RAD-165	27160500	
D6901A	HEAT SINK	RAD-164	27160499	
P6800	WS CLAMP	CB-71683(L=50)	260261	
D6901B,D6903B	SCREW	3P+10FN(3BC)	82143010GR	
Q3505B,Q3506B	SCREW	3P+10FN(3BC)	82143010GR	
Q3507B,Q3508B	SCREW	3P+10FN(3BC)	82143010GR	

DISPLAY CIRCUIT PC BOARD (NADIS-8683-1C)

FRONT VIDEO PC BOARD (NAETC-8684-1C)

HEADPHONE TERMINAL PC BOARD (NAETC-8685-1C)

VOLUME PC BOARD (NAETC-8687-1C)

HOLDER PC BOARD (NAETC-8721-1C)

HOLDER PC BOARD (NAETC-8722-1C)

CIRCUIT NO.	PART NAME	DESCRIPTION	PART NO.	REMARKS
Q7501	FL TUBE	HNA-16SM10T	212249GRA	
Q7502	IC	M66005-0001AHP	22242208R3	
Q7515,Q7601	IC	NE5532APSR	22242283R2	
Q7503,Q7510	TR	KTC3875-GR or	2216175R2 or	
	TR	2SC2712-GR	2213145R2	
Q7506	TR	KRC102S or	2216190R2 or	
	TR	RN1402	2214470R2	
Q7509	TR	KRA102S or	2216220R2 or	
	TR	RN2402	2214530R2	
Q7602,Q7605,Q7607	TR	RN1441	2215410R2	
U7501	REMO SENS	GP1UM281XKVFH=16MM	241361	
U7641	PHT CP	TORX177L	24120127	
D7501	ZENER D	UDZS8.2B or	224550820R2 or	
	ZENER D	HZU8.2B	224660824R2	
D7502	LED	SLI-343URC-TE7	225449	
D7503	LED	SEL4310G-D or	225292D or	
	LED	SEL4410G or	225454 or	
	LED	SLR-342MGTE7P	225455	
D7601	ZENER D	UDZS5.1B or	224550510R2 or	
	ZENER D	HZU5.1B	224660514R2	
L7501,L7502,L7503	CHOKE COIL	NCH-1471 or	231237K022R2 or	
L7621.L7622,L7623	CHOKE COIL	NCH-1587-022M	233533M022R2	
L7603,L7604,L7641	CHOKE COIL	NCH-1471 or	231237K022R2 or	
	CHOKE COIL	NCH-1587-022M	233533M022R2	
C7501,C7505,C7509	C-CERA C	CK725F1E-104Z1	332161040R1	
C7502,C7521	ELECT C	CE04W6.3V-100M(S)	353721019	
C7504,C7512,C7513	C-CERA C	CK725F1H-473Z1	332154730R1	
C7506,C7507	C-CERA C	CK725F1H-104Z1	332151040R1	
C7508	C-CERA C	CK725F1H-223Z1	332152230R1	
C7510,C7519,C7523	C-CERA C	CK725F1E-104Z1	332161040R1	
C7511	ELECT C	CE04W50V-33M	355783309	
C7514,C7623	C-CERA C	CK725F1H-104Z1	332151040R1	
C7515,C7516,C7517	C-CERA C	CC725CH1H-101J1	342101014R1	

C7518,C7520	C-CERA C	CC725CH1H-101J1	342101014R1	
C7522	MMT C	MMT50V-474J	375524744	
C7554	ELECT C	CE04W50V-2.2M(S)	353780229	
C7591,C7592	C-CERA C	CK725F1E-104Z1	332161040R1	
C7600,C7633,C7634	C-CERA C	CK725B1H-102K1	332101025R1	
C7603	C-CERA C	CC725CH1H-101J1	342101014R1	
C7605	C-CERA C	CC725CH1H-330J1	342103304R1	
C7607,C7609	ELECT C	CE04W16V-10M(S)	353741009	
C7610,C7612,C7613	ELECT C	CE04W16V-47M(S)	353744709	
C7621,C7622	C-CERA C	CC725CH1E-102J1	342111024R1	
C7624	C-CERA C	CK725B1H-102K1	332101025R1	
C7631,C7632	C-CERA C	CC725CH1H-471J1	342104714R1	
C7641	VR C	CE04W16V-100M(VR)	394641017	
C7642	C-CERA C	CK725F1E-104Z1	332161040R1	
R7501	C-CARBON R	RN72K1J-104JE	435031044R1	
R7517,R7518	C-CARBON R	RN72K1J-221JE	435032214R1	
R7519	C-CARBON R	RN72K1J-273JE	435032734R1	
R7520,R7521	C-CARBON R	RN72K1J-332JE	435033324R1	
R7522,R7523	C-CARBON R	RN72K1J-221JE	435032214R1	
R7527,R7622	C-CARBON R	RN72K1J-101JE	435031014R1	
R7528,R7545,R7546	C-CARBON R	RN72K1J-102JE	435031024R1	
R7529	C-CARBON R	RN72K1J-101JE	435031014R1	
R7530,R7556,R7562	C-CARBON R	RN72K1J-222JE	435032224R1	
R7542	C-CARBON R	RN72K1J-181JE	435031814R1	
R7551,R7563,R7568	C-CARBON R	RN72K1J-331JE	435033314R1	
R7552,R7564,R7569	C-CARBON R	RN72K1J-471JE	435034714R1	
R7553	C-CARBON R	RN72K1J-561JE	435035614R1	
R7554,R7560	C-CARBON R	RN72K1J-821JE	435038214R1	
R7555,R7561	C-CARBON R	RN72K1J-122JE	435031224R1	
R7557	C-CARBON R	RN72K1J-331JE	435033314R1	
R7558	C-CARBON R	RN72K1J-471JE	435034714R1	
R7559	C-CARBON R	RN72K1J-561JE	435035614R1	
R7565	C-CARBON R	RN72K1J-561JE	435035614R1	
R7566,R7571	C-CARBON R	RN72K1J-821JE	435038214R1	
R7567,R7572	C-CARBON R	RN72K1J-122JE	435031224R1	
R7570	C-CARBON R	RN72K1J-561JE	435035614R1	
R7573,R7576	C-CARBON R	RN72K1J-222JE	435032224R1	
R7574,R7577,R7579	C-CARBON R	RN72K1J-392JE	435033924R1	
R7578	C-CARBON R	RN72K1J-123JE	435031234R1	
R7580	C-CARBON R	RN72K1J-392JE	435033924R1	
R7581,R7582	C-CARBON R	RN72K1J-000JE	435030004R1	
R7591,R7592	C-CARBON R	RN72K1J-103JE	435031034R1	
R7600,R7618	C-CARBON R	RN72K1J-331JE	435033314R1	
R7605	C-CARBON R	RN72K1J-104JE	435031044R1	
R7606	C-CARBON R	RN72K1J-102JE	435031024R1	
R7607	C-CARBON R	RN72K1J-224JE	435032244R1	
R7609	C-CARBON R	RN72K1J-333JE	435033334R1	
R7611,R7613,R7641	C-CARBON R	RN72K1J-221JE	435032214R1	
R7621,R7623	C-CARBON R	RN72K1J-100JE	435031004R1	
R7624,R7625	C-CARBON R	RN72K1J-563JE	435035634R1	
R7631,R7632	C-CARBON R	RN72K1J-331JE	435033314R1	
R7633,R7634,R7635	C-CARBON R	RN72K1J-750JE	435037504R1	
R7703	C-CARBON R	RN72K1J-472JE	435034724R1	
R7711,R7712,R7713	C-CARBON R	RN72K1J-000JE	435030004R1	
R7714,R7715,R7716	C-CARBON R	RN72K1J-000JE	435030004R1	
R7718,R7719	C-CARBON R	RN72K1J-000JE	435030004R1	
R7721,R7722	C-CARBON R	RN72K1J-000JE	435030004R1	
S7501,S7502,S7503	PUSH SW	NPS-111-S681 or	25035718 or	
S7504,S7505,S7507	PUSH SW	NPS-111-S677	25035714	
S7508,S7509	PUSH SW	NPS-111-S681 or	25035718 or	
S7510,S7511,S7512	PUSH SW	NPS-111-S677	25035714	
S7513,S7514,S7515	PUSH SW	NPS-111-S681 or	25035718 or	
	PUSH SW	NPS-111-S677	25035714	
S7516,S7517,S7518	PUSH SW	NPS-111-S681 or	25035718 or	
S7519,S7520,S7521	PUSH SW	NPS-111-S677	25035714	
S7522,S7523,S7524	PUSH SW	NPS-111-S681 or	25035718 or	
S7525,S7526,S7527	PUSH SW	NPS-111-S677	25035714	
S7528,S7530,S7531	PUSH SW	NPS-111-S681	25035718	
S7532,S7533,S7534	PUSH SW	NPS-111-S677	25035714	
S7591	R ENCODE	EC12E24C25	25065628	
P7602	JACK	YKB26-5153	25045385	
P7631	PIN JACK	NPJ-7PDB632	25045854	

JL7501B	SOCKET	NSCT-3P95	25050267	
JL7540B	SOCKET	NSCT-9P101	25050273	
P7534B	SOCKET	NSCT-40P2274	25052377	
P7601	ST JACK	YKB21-5144	25045853	
JL7501A	WIRE HOL	NSCT-3P894	25051107	
JL7503A,JL7503B	WIRE HOL	NSCT-3P894	25051107	
JL7540A	WIRE HOL	NSCT-9P900	25051113	
JL7542B,JL957A	WIRE HOL	NSCT-5P896	25051109	
E7621	TRM	NTM-1P233(M1969)	25060302	
P7603	WS CLAMP	CB-71683(L=50)	260261	
Q7501A	HOLDER	(FL)	27191222B	
XM RADIO PC BOARD (NARF-8688-1A) North American models				
CIRCUIT NO.	**PART NAME**	**DESCRIPTION**	**PART NO.**	**REMARKS**
Q7001	IC	M30281FAHP	222W0041R3	
Q7002	IC	TC74VHC541FT(EKJ) or	22274541E1R2TO or	
	IC	TC74VHC541FT or	22274541ER2TO or	
	IC	SN74AHC541PWR	22274541IR2TI	
Q7003	IC	TC74HCT7007AF	222740077R2TO	
Q7004	IC(REGULATOR)	TA48033AF(TE16L、NQ) or	22278033DR2T or	
	IC(REGULATOR)	NJM2391DL1-33 or	22278033DR2JR or	
	IC(REGULATOR)	BA33BC0FP	22278033DR2RH	
Q7101	IC	F2602-01	22242266R2	
Q7102	IC	AK4384ET	22242280R2	
Q7103	IC	NE5532APSR	22242283R2	
Q7104	IC	MAX1930ESA or	22242279R2 or	
	IC	TPS2011ADR	22242273R2	
Q7105	IC(REGULATOR)	78L05(NJM78L05UA)	222780053R2JR	
D7001	ZENER D	UDZS5.1B or	224550510R2 or	
	ZENER D	HZU5.1B	224660514R2	
X7001	CERA LOCK	CSTCW2000MX01	3010342R2	
X7101	CRYSTAL	DSX840GA 45.1584MHz	3010420R2	
L7001,L7104,L7105	CHOKE COIL	NCH-1471 or	231237K022R2 or	
	CHOKE COIL	NCH-1587-022K	233533K022R2	
L7101,L7102	CHOKE COIL	BLM21PG221SN1	230949R2	
L7103	EMIFIL	BK1608LM182-T	230958R1	
C7001,C7002,C7004	C-CERA C	CK725F1E-104Z1	332161040R1	
C7003,C7111,C7132	VR C	CE04W16V-100M(VR)	394641017	
C7005,C7006,C7101	C-CERA C	CK725F1E-104Z1	332161040R1	
C7007,C7123	VR C	CE04W6.3V-470M(VR)	394624717	
C7102,C7119	C-CERA C	CK725B1H-102K1	332101025R1	
C7103,C7104,C7105	C-CERA C	CK725F1E-104Z1	332161040R1	
C7106,C7114,C7115	C-CERA C	CK725F1E-104Z1	332161040R1	
C7112	C-CERA C	CC725CH1H-040C1	342100401R1	
C7113	C-CERA C	CC725CH1H-080D1	342100802R1	
C7116,C7118,C7120	C-CERA C	CK725F1E-104Z1	332161040R1	
C7121,C7124,C7125	VX C	CE04W50V-10M(VX)	393381007	
C7122,C7134,C7135	C-CERA C	CK725F1E-104Z1	332161040R1	
C7126,C7127	C-CERA C	CC725CH1H-821J1	342108214R1	
C7128,C7129	C-CERA C	CC725CH1H-821J1	342108214R1	
C7130,C7131	VX C	CE04W50V-10M(VX)	393381007	
C7133,C7136	VR C	CE04W16V-100M(VR)	394641017	
C7137	C-CERA C	CK725F1E-104Z1	332161040R1	
R7001,R7003,R7005	C-CARBON R	RN72K1J-102JE	435031024R1	
R7002,R7004,R7032	C-CARBON R	RN72K1J-103JE	435031034R1	
R7006,R7007,R7008	C-CARBON R	RN72K1J-102JE	435031024R1	
R7009,R7014,R7021	C-CARBON R	RN72K1J-102JE	435031024R1	
R7010,R7011,R7012	C-CARBON R	RN72K1J-221JE	435032214R1	
R7013,R7017,R7018	C-CARBON R	RN72K1J-221JE	435032214R1	
R7022,R7023,R7024	C-CARBON R	RN72K1J-102JE	435031024R1	
R7025	C-CARBON R	RN72K1J-221JE	435032214R1	
R7101,R7102,R7103	C-CARBON R	RN72K1J-104JE	435031044R1	
R7104,R7105	C-CARBON R	RN72K1J-104JE	435031044R1	
R7111,R7112	C-CARBON R	RN72K1J-102JE	435031024R1	
R7113,R7114,R7117	C-CARBON R	RN72K1J-101JE	435031014R1	
R7115	C-CARBON R	RN72K1J-681JE	435036814R1	
R7116	C-CARBON R	RN72K1J-105JE	435031054R1	
R7118,R7119,R7120	C-CARBON R	RN72K1J-331JE	435033314R1	
R7121,R7126	C-CARBON R	RN72K1J-000JE	435030004R1	
R7127,R7128	C-CARBON R	RN72K1J-000JE	435030004R1	
R7130,R7131,R7132	C-CARBON R	RN72K1J-222JE	435032224R1	
R7133,R7136,R7137	C-CARBON R	RN72K1J-222JE	435032224R1	
R7134,R7135	C-CARBON R	RN72K1J-332JE	435033324R1	

R7138,R7139	C-CARBON R	RN72K1J-220JE	435032204R1	
R7140,R7141	C-CARBON R	RN72K1J-220JE	435032204R1	
R7142,R7143	C-CARBON R	RN72K1J-104JE	435031044R1	
P7001A	SOCKET	NSCT-9P2400	25052503	
P7102	SOCKET	CAM-C16	25053104R2	
P710B	SOCKET	NSCT-13P2193	25052296	

EXPLODED VIEW-PARTS LIST

NOTE: THE COMPONENTS IDENTIFIED BY MARK ! ARE CRITICAL FOR RISK OF FIRE AND ELECTRIC SHOCK. REPLACE ONLY WITH PART NUMBER SPECIFIED.

CAUTION: Replacement for transistor of mark *, if necessary must be made from the same beta group (h_{FE}) as the original type.

NOTE: <D>: USA model only <A>:Australian model only

REF.NO.	PART NO.	DESCRIPTION
A001	27111427A	Front bracket
A002	28325756	Knob, standby
A003	801618	3TTB+8B(CU)SR,Screw
A005	27268164	Guide, volume
A008	28133418	Back plate
A009	28192078	Clear plate
A010	27215377	Decorative frame
A011	28198905	Facet
A012	28141650	Cushion
A015	27141787	Retainer HP
A019	28135278	Badge
A020	28141562	t5*30*5,Cushion
A037	838430088GR	3TTB+8B(3BC),Screw
A040	28326231	Knob, volume
A044	28141637	Cushion
A050	27100468A	Chassis
A051	27130991A	Bracket FR
A052	27190470	KGLS-18S,Holder
A053	27190524	KGLS-14RT,Holder
A054	27190991	Holder
A055	260208	BSK-1,Wire tie
A056	830440089GR	4TTC+8C(3BC),Screw
A057	801618	3TTB+8B(CU)SR,Screw
A059	27190802	KGPS-14RF,Holder
A060	27130990	Bracket, fan
A062	838450108GR	5TTB+10B(3BC),Screw
A063	27270439	Spacer
A064	27190608-1	UA-0 V0,Clamp
A065	27270147	8X3X0.188,Spacer
A067	27131004	Bracket U
A077	801618	3TTB+8B(CU)SR,Screw
A080	27160565A	Heat sink
A081	29110083	Cloth tape
A082	801606	3SMH10W.SW+15B(CU),Screw
A083	29110083	Cloth tape
A087	27130745	Bracket
A089	28141585	W15*3t,Cushion
A090	27150507	Shield plate FFC
A095	28184952	Top cover
A096	28141563	t3*50*10,Cushion
A099	29364123	Label, cover
A100	838440089GR	4TTB+8C(3BC),Screw
A101	838430088GR	3TTB+8B(3CM),Screw
A105	801618	3TTB+8B(CU)SR,Screw
A106	838430088GR	3TTB+8B(3BC),Screw
A110	29364345	Label PT
A111	27175418	Leg

REF.NO.	PART NO.		DESCRIPTION
A114	838430088GR		3TTB+8B(3BC),Screw
A115	27255004		CS-1U,Clip
A119	28141647		Cushion
A401	27123490		Rear panel <D>
	27123491		Rear panel <A>
A402	838430088GR		3TTB+8B(3BC),Screw
A403	87643010GR		W3*10F(3BC),Washer
A404	838130088GR		3TTB+8B(3CM),Screw
A405	838440089GR		4TTB+8C(3BC),Screw
A409	27270463		T0.5*Φ8*Φ3.5,Spacer
A410	27212842		Front panel <D>
	27212843		Front panel <A>
A420	29363195		Label, hookup <D>
F6901,F6902	252301GR	!	12A-TUL-250V,Fuse
F901	252079GR	!	6.3A-SE-EAK,Fuse <A>
	252330GR	!	10A-UL/T-233,Fuse <D>
F903	252075GR	!	2.5A-SE-EAK,Fuse <A>
	252326GR	!	5A-UL/T-233,Fuse <D>
F931,F932	252073GR	!	1.6A-SE-EAK,Fuse
F951,F952	252079GR	!	6.3A-SE-EAK,Fuse
P691	24502319		D09A-12PG(EX),Fan
P701	2047131012		NCFC7-131012,FFC
P7534	2045405512		NCFC5-405012,FFC
Q6050,Q6051,Q6052	2203686 or	*	MN150S-P or
Q6053,Q6054	2203683 or	*	MN150S-O or
Q6055,Q6056	2203684	*	MN150S-Y
Q6050A	223024		AC238,Isolated plate
Q6060,Q6061,Q6062	2203696 or	*	MP150S-P or
Q6063,Q6064	2203693 or	*	MP150S-O or
Q6065,Q6066	2203694	*	MP150S-Y,Transistor
T901	2301830	!	NPT-1526D,Power transformer <D>
	2301831	!	NPT-1526P,Power transformer <A>
U02	1B104557-1D		NAVD-8657-1D, Video circuit PC board ass'y <D>
	1B104557-1H		NAVD-8657-1H, Video circuit PC board ass'y <A>
U03	1B104560-1R		NADG-8660-1R, DSP circuit PC board ass'y <D>
	1B104560-1T		NADG-8660-1T, DSP circuit PC board ass'y <A>
U032	1B104561-1R		NAAR-8661-1R,Main microprocessor PC board ass'y <D>
	1B104561-1T		NAAR-8661-1T,Main microprocessor PC board ass'y <A>
U04	1B104564-1W		NAPS-8664-1W, Primary circuit PC board ass'y <D>
	1B104564-1X		NAPS-8664-1X, Primary circuit PC board ass'y <A>
U042	1B104565-1W		NAPS-8665-1W, Secondary circuit PC board ass'y <D>
	1B104565-1X		NAPS-8665-1X, Secondary circuit PC board ass'y <A>
U043	1B104566-1W		NAETC-8666-1W, Speaker terminal PC board ass'y <D>
	1B104566-1X		NAETC-8666-1X, Speaker terminal PC board ass'y <A>
U044	1B104567-1W		NAETC-8667-1W, Speaker terminal C PC board ass'y <D>
	1B104567-1X		NAETC-8667-1X, Speaker terminal C PC board ass'y <A>
U045	1B104568-1W		NAAF-8668-1W, Driver circuit PC board ass'y <D>
	1B104568-1X		NAAF-8668-1X, Driver circuit PC board ass'y <A>
U048	1B104571-1W		NAETC-8671-1W,AC inlet PC board ass'y <D>
	1B104571-1X		NAETC-8671-1X,AC inlet PC board ass'y <A>
U06	1B104578-1J		NAAF-8678-1J,Power amplifier PC board ass'y
U062	1B104580-1J		NAETC-8680-1J,Thermal detector PC board ass'y
U063	1B104581-1J		NAETC-8681-1J,Holder PC board ass'y
U064	1B104582-1J		NAAF-8682-1J,Surround back amplifier PC board ass'y
U07	1B104583-1C		NADIS-8683-1C,Display circuit PC board ass'y
U072	1B104584-1C		NAETC-8684-1C,Front video PC board ass'y

REF.NO.	PART NO.	DESCRIPTION
U073	1B104585-1C	NCETC-8685,Headphone terminal PC board ass'y
U075	1B104587-1C	NAETC-8687-1C,Volume PC board ass'y
U076	1B104521-1C	NAETC-8721-1C,Holder PC board ass'y
U077	1B104522-1C	NAETC-8722-1C,Holder PC board ass'y
U08	1B104588-1A	NARF-8688-1A,XM radio PC board ass'y <D>
U11	240152 or	FAE385-A11US or
	240156	ENG06507QFUS,Tuner unit <D>
	240155	FAE485-E12EX,Tuner unit <A>

PACKING VIEW-PARTS LIST

NOTE: THE COMPONENTS IDENTIFIED BY MARK ! ARE CRITICAL FOR RISK OF FIRE AND ELECTRIC SHOCK. REPLACE ONLY WITH PART NUMBER SPECIFIED.

NOTE: <D>: USA model only <A>:Australian model only

REF.NO.	PART NO.		DESCRIPTION
A601	29092286A		Pad
A603	29054470		Carton, accessory
A605	29100153		1020x770,Polybag
A606	29110149		Cellophane tape
A607	29110148		Tape PP
A609	29100097-1A		350*250,Polyabg
A610	29054449A		Carton box <D>
A610	29054468A		Carton box <A>
A612	29364239		Label EAN <A>
A612	29364243		Label UPC <D>
A801	29363059A		Label, cable SP
A820	29344081		Instruction manual En
A821	29344082		Instruction manual, digest <D>
A826	29344100		Instruction manual U9
A827	29355538		Instruction sheet XM <D>
A831	24140621		RC-621M,Remote control
A841	3010358		LR6/AA(UM-3),Battery
A843	232140		NMA-3057,AM loop antenna
A843	29110149		Cellophane tape
A845	292191		FM antenna
A846	29100217		t0.1*70*100,Polybag
A851	29365089A		Warranty card <D>
P901	253297KAW or	!	AS-UC-2 or
	253352TES	!	AS-UC-2,Power supply cord <D>
	253391VOL	!	AS-SAA,Power supply cord <A>
U12	1B068MIC		MIC-5000,Microphone

Integra Division of
ONKYO CORPORATION
Sales & Product Planning Div. : 2-1, Nisshin-cho, Neyagawa-shi, OSAKA 572-8540, JAPAN
Tel: 072-831-8023 Fax: 072-831-8124 http://www.onkyo.com/

Integra Division of
ONKYO U.S.A. CORPORATION
18 Park Way, Upper Saddle River, N.J. 07458, U.S.A.
Tel: 201-785-2600 Fax: 201-785-2650 http://www.integrahometheater.com